NO. 84 NOTES FROM THE SHOP $3.95

Woodsmith®

No. 84 December, 1992

Woodsmith®

Editor **Donald B. Peschke**
Managing Editor **Douglas L. Hicks**
Assistant Editors **James M. Dolan**
Philip A. Totten
Jonathan Garbison

Creative Director **Ted Kralicek**
Art Director **Rod Stoakes**
Senior Illustrators **David Kreyling**
Chris Glowacki
Illustrators **Dirk Ver Steeg**
Cinda Shambaugh
Photographer **Crayola England**
Design Director **Ken Munkel**
Senior Designer **Jan Hale Svec**
Designer **Kent Welsh**
Shop Manager **Steve Curtis**

Circulation Director **Liz Bredeson**
Subscription Manager **Sandy Baum**
Newsstand Sales **Kent A. Buckton**

PUBLISHING SERVICES
Associate Editor **Gordon C. Gaippe**
Sr. Graphic Artist **Robert H. Whitmer**
Illustrator **Mark Higdon**

CORPORATE SERVICES
Controller **Paul E. Gray**
Accounting **Linda O'Rourke**
Bookkeeping **Julianne Spears**
Information Serv. Mgr. **Joyce Moore**
Network Administrator **Douglas M. Lidster**
Administrative Assts. **Cheryl A. Scott**
Julia Fish
Receptionist **Jeanne Johnson**
Building Maintenance **Ken Griffith**
Archie Krause

WOODSMITH SOURCEBOOK
Marketing Director **Robert Murry**
Art Director **Cindy Jackson**
Customer Service Mgr. **Laura McNelly**
Project Supplies **Linda Jones**
Technical Support **Jeff Janes**
Systems Operator **Linda Morrow**
Receptionist **Keri Lee**

CUSTOMER SERVICE
Jennie Enos (Supr.), Jennifer Murphy, Joy Johnson, Sara Kono, Ami Blanshan, Anna Cox, Chris Lo

SHIPPING DEPARTMENT
Jerry Carson (Supervisor), Gloria Sheehan, Donnie McVey, Chuck Carlson, Sylvia Carey

WOODSMITH STORE
Dave Larson (Manager), Wendell Stone, Vicki Edwards, Dominic Bazzocco, Steve Johnson

Woodsmith® (ISSN 0164-4114) is published bimonthly (Feb., April, June, Aug., Oct., Dec.) by Woodsmith Corporation, 2200 Grand Ave., Des Moines, IA 50312. Printed in U.S.A.
Woodsmith® is a registered trademark of Woodsmith Corp. Copyright© **1992** Woodsmith Corporation. All rights reserved.
Subscriptions: Single copy: $3.95. One year subscription (6 issues), $17.95. Two years (12 issues), $31.95. (Canada/Foreign add $5 per year, U.S. funds.)
Second Class Postage Paid at Des Moines, IA and at additional offices.
Postmaster: Send change of address to *Woodsmith*, Box 10718, Des Moines, IA 50350.
Subscription Questions? Call 1-800-333-5075, 8:00 am to 5:00 pm, Central Time, weekdays.

E D I T O R ' S C O L U M N

Sawdust

Have you ever tried to sneak up on a cut and found out you "oversnuck" by just a hair? I have. Many times. And it can be frustrating. Whether it's just a little mistake or a major setback, it can ruin a project — not to mention a good afternoon in the shop.

I've always thought the sign of a skilled craftsman is one who can carefully correct his mistakes. Or admit when it's time to start from scratch and make something over.

In thinking about this I decided to ask some of the folks here at *Woodsmith* to share their goofs — and how they fixed them. As you might guess, they seemed to be more willing to share the fixes than the foul-ups. Anyway, the result is an article about "Quick Fixes" on page 26.

A STORY. Sometimes, though, I think a *quick* fix might not always be the best solution. Time for another story.

About ten years ago I was turning a 14"-diameter walnut plate on the lathe. The plate blank was glued to a piece of plywood, and the plywood was screwed to the faceplate of the lathe. I thought I'd get fancy and turn the plate as thin as possible.

Everything was going along fine when I decided to turn the center just a *little bit* thinner. That was a wrong decision. The lathe tool cut right through the walnut and into the plywood.

It was one of those "critical" moments in the shop. Should I tear it off the lathe and fling it at the firewood pile in the corner? Or try to repair it?

No, this mistake was way beyond repair. But I didn't have the heart to see it as kindling for a fire the next winter.

So, instead, I decided to shut off the lights and go watch Columbo. Probably the best decision I could have made.

I went back to the shop the next morning with a much better perspective on the whole thing. I figured out a way to cut (turn) a 4"-diameter hole out of the center of the walnut plate. Then I turned a cherry disc that could be glued into the hole for a perfect fit.

I still have the plate and get comments on how the inlaid cherry is a nice design touch. (If they only knew the "hole" story.)

The point of this is that sometimes you can rush to throw away a piece because of a mistake, when it may be best to sit back awhile and think about the bigger picture. You might be able to figure out a solution you'll be more satisfied with in the end.

NEW DEPARTMENT. The article on "Quick Fixes" is the first of a new department we're calling "In The *Woodsmith* Shop." It won't always be fixes. I get lots of letters asking for explanations on why we do things the way we do in our shop. We'll use this space to try to give you some answers.

Think of it as though you're visiting our shop every two months (without the noise or sawdust). We want to let you know about some of the techniques we use, offer some notes on project design, and talk about some of our favorite tools and jigs.

NEW FACES, NEW PLACES. Those of you who have been with *Woodsmith* for awhile know that from time to time I use this space to talk about new folks who have joined us. We recently hired Joyce Moore to head up our Information Services Department. (A fancy name for computer department.) Joyce has owned a consulting company and we've used her services in the past to evaluate our growing computer needs.

We've also shifted around a few people. One of our editors, Gordon Gaippe, has joined with graphic artist Bob Whitmer and illustrator Mark Higdon to form a group we're calling Publishing Services. They'll be working on a variety of booklets, assembly sheets for our project supplies kits, and other special projects.

I've asked Jon Garbison to fill Gordon's spot as assistant editor. Jon has spent the last year as our technical support person answering phone calls and letters from readers. He's also a former English teacher, so he's already at work on my grammar.

Finally, Jeff Janes, one of our customer service representatives, has stepped forward to fill Jon's shoes in the technical support position.

HELP WANTED. It seems like as we grow we continue to look for qualified people to join us. Right now we're looking for another full-time, in-house editor.

This person should have some magazine editing or writing experience, and, of course, be a woodworker. If you have these qualifications, send us a letter telling a little bit about yourself and your experiences.

Send your letter to Doug Hicks, Managing Editor, 2200 Grand Ave., Des Moines, IA 50312. He'll get back to you.

Don

A LOOK INSIDE

Contents

Tips & Techniques 4 *Seven great tips. 1) Trimming Dovetails Flush. 2) Shim Saver. 3) Switch Extender. 4) Custom Fitting Dadoes. Plus Quick Tips.*

Oak Rocking Chair 6 *This Oak Rocking Chair is made from quartersawn white oak. It's a solid, handsome heirloom.*

Angled Tenon Jig 14 *Use this jig on the router table when you need to cut angled tenons (as for the Rocking Chair).*

Shop Notes 16 *1) Gluing an Octagon. 2) Fitting Legs to Rockers. 3) Sizing Splines. 4) Using an Adjustable Triangle. 5) Modifying a Bit.*

Oval Mirror 18 *The frame for this Oval Mirror is shaped using a router — so is the complex profile. We show you how.*

Oval Cutting Jig 22 *Drawing an oval is one thing, but cutting one is something else. Build this jig for use with your router.*

Quick Fixes 26 *Five fixes from the Woodsmith Shop. 1) Loose Tenons. 2) Open Miters. 3) Lifted Veneer. 4) Router Chipout. 5) Cracks & Splits.*

Router Table Tips 28 *A shop-made fence to convert your router table into an edge jointer or a zero-clearance fence.*

Removing Screws 30 *Have you ever tried to dig a broken or damaged screw out of a project? Here are two ways to help ease the pain.*

Sources 31 *Hardware and supplies needed for the projects in this issue.*

Oak Rocking Chair *page 6*

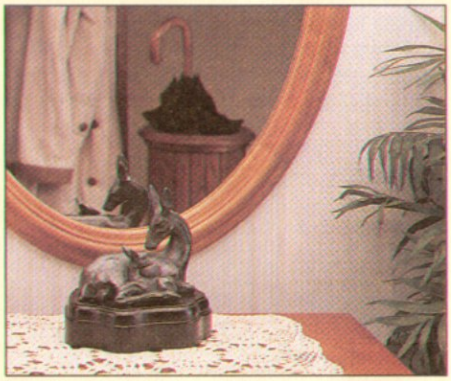

Oval Mirror *page 18*

Oval Cutting Jig *page 22*

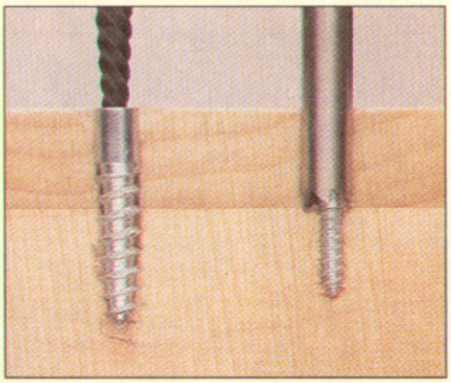

Removing Screws *page 30*

Tips & Techniques

TRIMMING DOVETAILS FLUSH

■ When I build a box using dovetails, it's easiest to make the pins and tails a bit long. After the box is assembled, I trim them flush with the sides of the box.

This can be done by carefully paring off the ends of the pins and tails with a chisel, and then sanding flush. But I found a faster and easier way — using a router and a flush trim bit.

The only problem with this technique is that when trimming the pins off the first side of a corner, the tails on the adjacent side get in the way. There isn't a flat surface for the router to ride on. To create a flat surface, I use a piece of 1/8"-thick Masonite.

To do this, first cut a piece of Masonite to fit between the protruding tails, see Fig. 1. Then attach it to the box with double-sided carpet tape, or clamp it if the clamp won't get in the way.

Now set the depth of the bit so the bearing rides below the protruding pins, see Fig. 2a. Then trim the pins flush in a series of light passes, see Fig. 2.

When the pins are flush, remove the Masonite and trim the ends of the tails, see Fig. 2b. Since the pins are now flush, they won't get in the way. So you won't need to use the Masonite.

Note: This is also a good way to trim finger and box joints.

Robert S. Burson
Florissant, Missouri

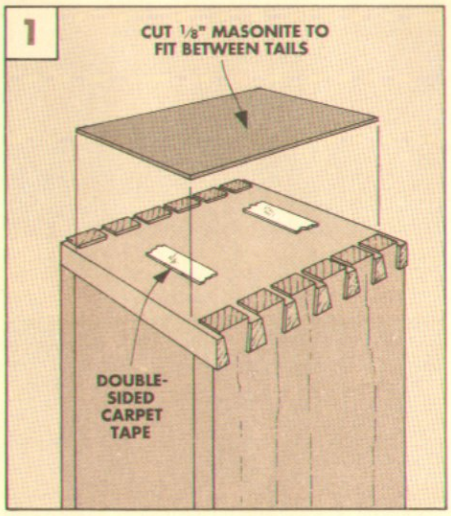

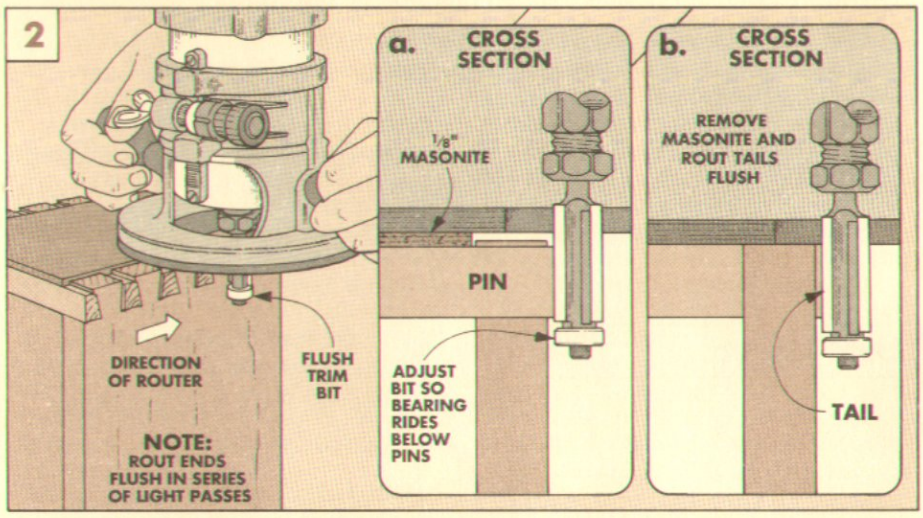

SHIM SAVER

■ I bought some brass shims from a woodworking mail order catalog to put between the blades of my stack dado set. They allow me to make very fine adjustments to the width of cut.

But I soon discovered a problem. The shims are so thin they fall into the threads of the arbor on my table saw. And then the shims bind or get chewed up when I tighten the bolt.

Fortunately, there's a very simple solution. Put a couple of small dots of grease or Vaseline on each shim, see Fig. 1. This makes the shim stick to the blade and prevents it from falling into the threads of the arbor.

Alan Schwartz
Gainesville, Florida

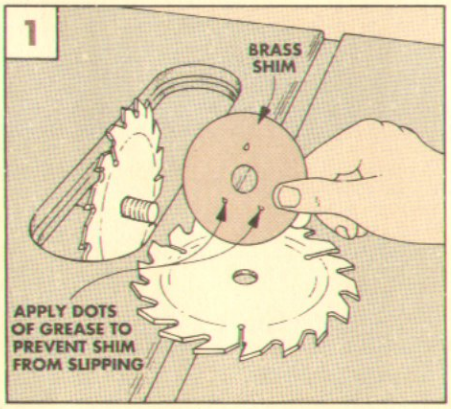

SWITCH EXTENDER

■ The on/off switch on a table saw should be easy to locate, even if you can't see it. But the toggle switch on my contractor's saw is under the saw table, and it's too small to find without leaning back to take a look.

To solve this problem, I made a simple switch extender, see Fig. 1. To do this, I bored a hole to fit the switch lever in the end of a 2" length of dowel, see Fig. 1a.

Then glue the dowel on the end of the switch lever with epoxy, hot melt glue, or another kind of gap-filling glue.

Now the toggle switch is easier to use, whether I can see it or not.

Clifford Hicks
Brevard, NC

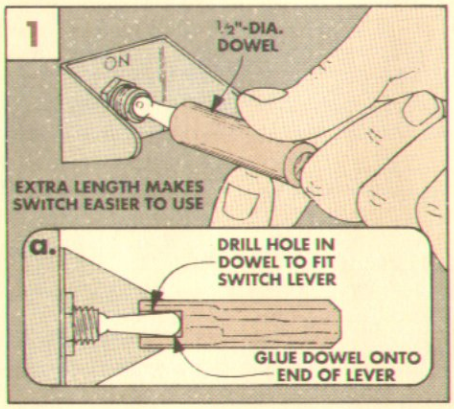

CUSTOM FITTING DADOES

■ Here's a neat technique for routing dadoes to *exact* size. All it takes is a router with a straight bit, and two guides, see photo.

To start, make the guides by gluing a hardwood fence to an oversize base of ¼" Masonite, see Figs. 1 and 1a. Then trim the excess width off the base on one side of the fence, see Fig. 1a.

Note: Since bits are often not centered in the base plate of the router, hold the same side of the router against the fence when trimming the guides and routing the dadoes.

To rout a dado, first lay out one side of the dado on the workpiece. Then clamp one of the guides along that line.

The trick to getting the dado to exact size is to use the piece that will fit in the dado as a spacer when positioning the second guide. (Or use a scrap piece of the same thickness.)

Position the spacer against the first guide. Then place the second guide against the spacer and clamp the second guide to the workpiece, see Fig. 2.

Rout the dado by running the router along one guide and back along the other, see Fig. 3.

Brett Anthony
San Jose, California

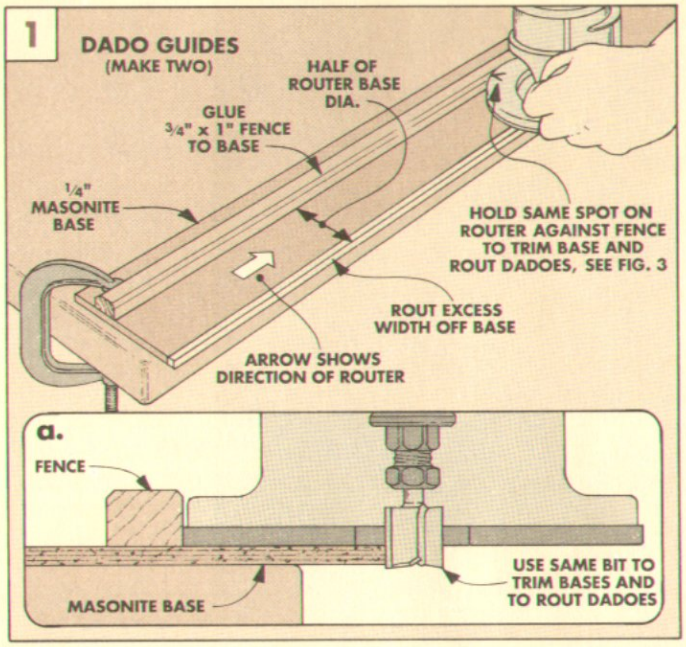

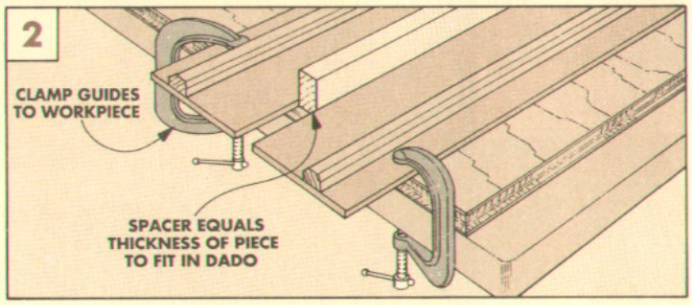

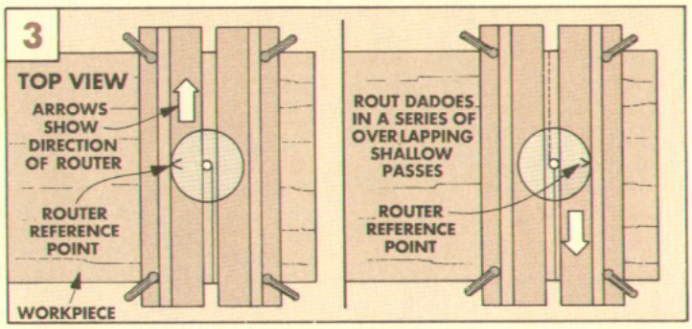

QUICK TIPS

REMOVING SCREWS

■ It often seems nearly impossible to remove screws from old furniture. I have found that the bond between the screw and the wood is more easily broken if the screw is first *tightened* a tiny bit, and then backed out.

Jerome A. Jahnke
Milwaukee, Wisconsin

Editor's Note: For some ways to remove broken *woodscrews, see the article on page 30.*

STORING FINISHES

■ Water-based polyurethanes are easy to use and clean-up. But once opened, oxygen gets in the can. When the can is resealed, it starts rusting almost immediately. Then when the can is reopened, rust falls into the finish.

To avoid the problem, store the unused portion in a plastic bottle or jar with a plastic lid. And use the smallest size possible.

Cary D. Lowrence
Orland Hills, Illinois

ENLARGING PLANS

■ When building a project from *Woodsmith*, I take the magazine to a copy center and have the plans copied. At the same time, I have them enlarged to 11" x 14". This makes the plans easier to read, and I don't risk damaging the magazine in my shop.

I also mark changes I make on the copies, so the magazine stays in its original condition.

Wallace Karrasch
Milwaukee, Wisconsin

SEND IN YOUR TIPS

If you would like to share an original tip or idea, just send it to *Woodsmith*, Tips and Techniques, 2200 Grand Ave., Des Moines, Iowa 50312.

We will pay (upon publication) $15 to $100, depending on the published length of the tip. Please include an explanation, a photo or sketch (we'll draw a new one), and a daytime telephone number, in case we have some questions.

Oak Rocking Chair

To rock smoothly, the curved rockers have to be identical. The secret is to cut and sand one curved piece smooth. Then use it as a template to make the second one match the first.

Curved parts. That's what makes a Rocking Chair different from an ordinary chair. And cutting curved parts accurately can seem intimidating. But it doesn't have to be if you follow a certain procedure.

EXACT DUPLICATES. The usual way of making curved pieces graceful and smooth is to start with a grid pattern, then re-use the pattern on all the matching pieces.

On this chair I did something different. Because there have to be *exact* duplicates of many of the curved parts, I didn't re-use the patterns. It doesn't matter if the duplicate pieces aren't exactly like the original pattern. Only that they're exact duplicates of each other.

The secret is to concentrate on the first piece. After cutting it to rough shape, I sanded until it had a consistently smooth curve. Then, to lay out the matching pieces, I used the first piece as a pattern. Not the original pattern.

CUTTING ANGLED TENONS. There are also a couple pieces in this project that join at an angle. To make cutting these as easy as possible, I built a special jig for the router table. For more on this jig, see page 14.

WOOD & FINISH. To give the Rocking Chair the look of an antique, I used quartersawn white oak throughout. Then I stained it with Minwax Special Walnut, and applied two coats of Minwax Polyurethane to protect the oak.

EXPLODED VIEW

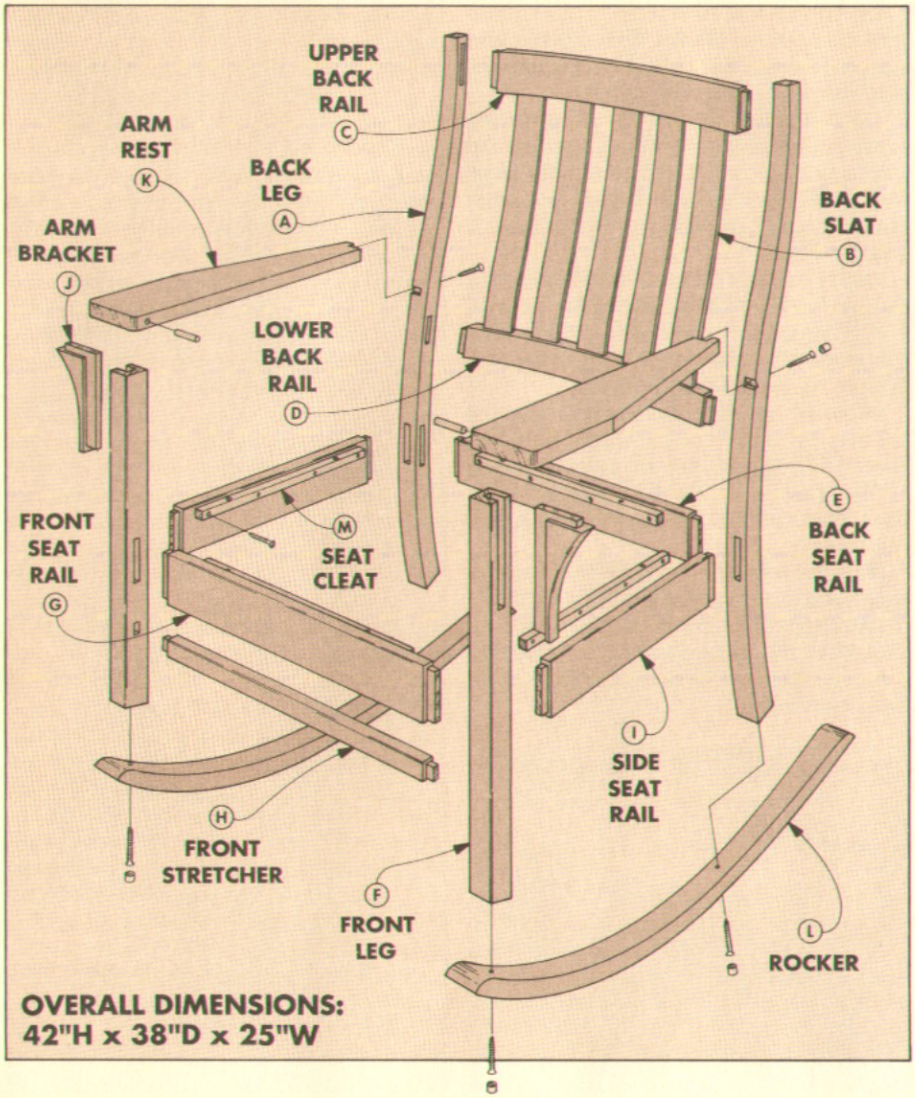

OVERALL DIMENSIONS:
42"H x 38"D x 25"W

MATERIALS

BACK ASSEMBLY

A	Back Legs (2)	1½ x 6 - 40 (rgh)
B	Back Slats (5)	1¾ x 2 - 17
C	Upper Back Rail (1)	1¾ x 3 - 19⅝
D	Lower Back Rail (1)	1¾ x 2½ - 19⅝
E	Back Seat Rail (1)	¾ x 3 - 19⅝

FRONT ASSEMBLY

F	Front Legs (2)	1½ x 1½ - 23½
G	Front Seat Rail (1)	¾ x 3 - 21¼
H	Front Stretcher (1)	¾ x 1¼ - 21¼

SIDE ASSEMBLY

I	Side Seat Rails (2)	¾ x 3 - 17
J	Arm Brackets (2)	¾ x 2 15/16 - 8 9/16
K	Arm Rests (2)	¾ x 4½ - 21¼
L	Rockers (2)	2¼ x 7½ - 38 (rgh)

SEAT ASSEMBLY

M	Seat Cleats (4)	¾ x ¾ - 15
N	Seat Panel (1)	¾ ply - 17 x 22 (rgh)

SUPPLIES

HARDWARE

- (24) #8 x 1¼" Fh Woodscrews
- (4) #12 x 2½" Fh Woodscrews
- (2) #8 x 1½" Fh Woodscrews
- (6) Wood plugs (or short dowel rod)

FINISH

- Minwax Special Walnut Stain
- Minwax Satin Polyurethane Top Coat

UPHOLSTERY

- (1) 17" x 22" (rgh) piece 2" foam
- (1) 25" x 30" piece fabric (or leather)

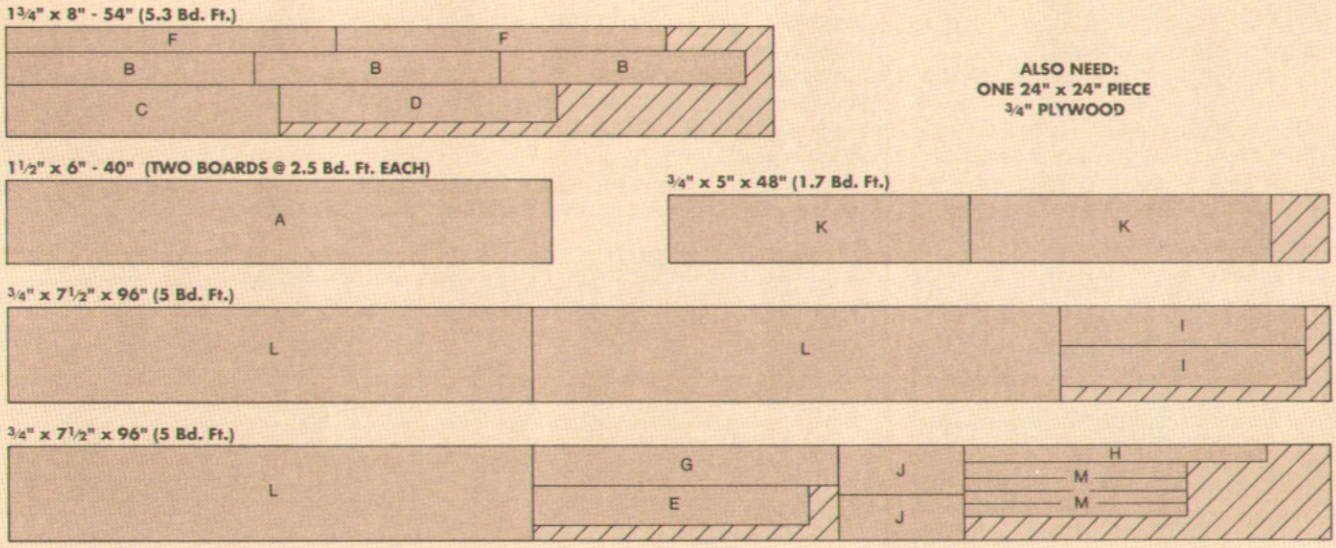

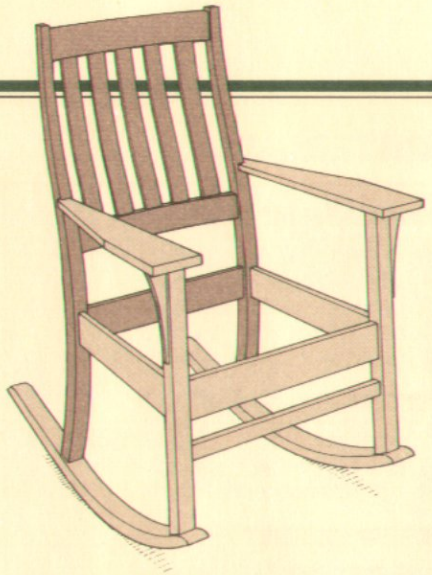

BACK LEGS

The Oak Rocking Chair has two main sub-assemblies, a back and a front. I began by building the vertical parts of the back assembly: the back legs and slats.

LEG BLANKS. Even though they're nicely curved, the back legs of this chair aren't delicate — they're made from 1½"-thick stock.

I started by cutting two oversize blanks (one for each leg) to rough dimensions, see the pattern at right.

LAY OUT SHAPE. Now transfer the leg pattern to one of the blanks. (Enlarge the grid pattern to actual size, or, for a set of full-size patterns, see Sources on page 31.)

LAY OUT MORTISES. Before cutting the leg to shape, it's easiest to first lay out all the mortises. Then drill the mortise in the edge for the side seat rail (while the opposite edge is still straight), see detail on the leg pattern and also Fig. 1.

FIRST LEG. After the mortise is drilled, I cut the first **back leg (A)** to shape in two stages. First, I bandsawed the curve to within 1/16" of the pencil lines. Then I sanded up to the pencil lines to smooth out the curves.

SECOND LEG. Now transfer the shape of the first leg to the blank for the second leg. (I used the leg itself, not the pattern.)

Also transfer the location of all the mortises. Then drill out the mortise for the side rail, see Fig. 1.

Now the second leg can be bandsawn to rough shape and sanded to match the first.

DRILL MORTISES. When both back legs are sanded to the same shape, the remaining three mortises can be drilled on the side of each leg, see Fig. 2.

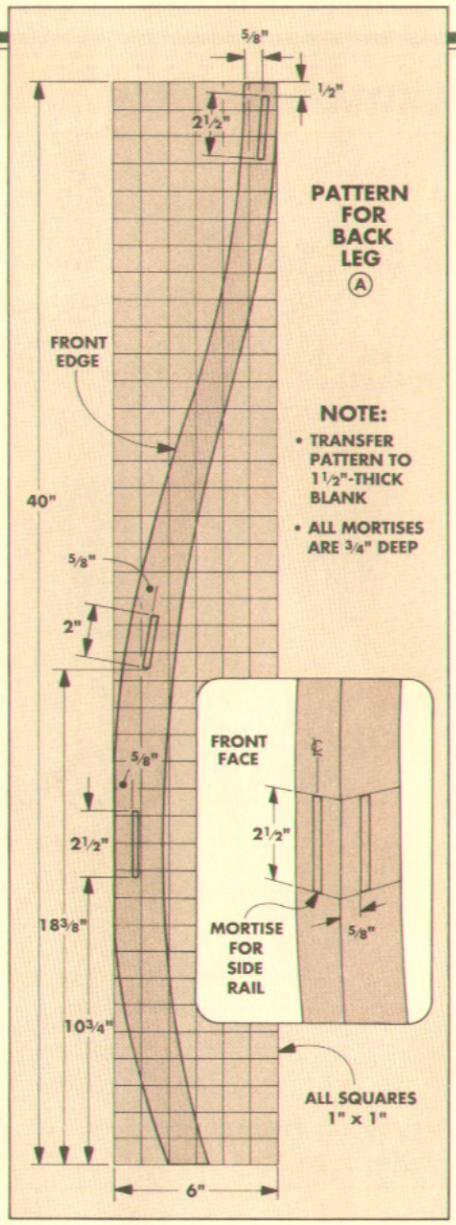

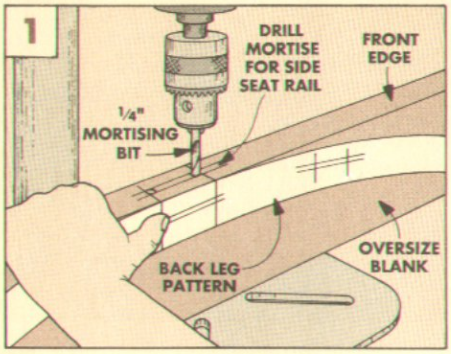

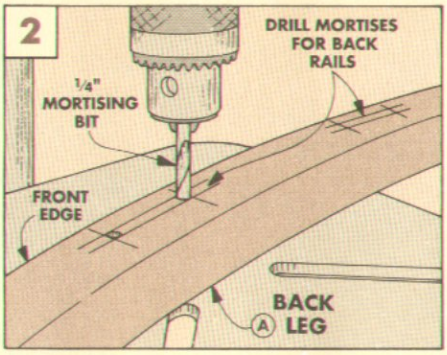

BACK SLATS

The five back slats have the same curve as the upper part of the back legs.

LAY OUT SHAPE. Start by cutting oversize blanks from 1¾"-thick stock, see Fig. 3. (Three blanks are needed — two slats can be cut from each, giving you one extra slat.)

Then transfer the curve of the top of the back leg — *front* edge only — to this blank.

BANDSAW. Now bandsaw to within 1/16" of the pencil mark, then sand the curve smooth up to the pencil mark. To cut each of the five **back slats (B)** to the same shape and thickness, I used a pointed rub block on the band saw table, see Fig. 4.

To use the rub block, first clamp it 5/16" from the side of the blade. Then, push the workpiece through the saw with the curved front edge of the workpiece sliding across the point of the rub block. This slices off one of the back slats like a slab of bacon.

THICKNESS SAND. When all the slats have been cut out, sand them to finished thickness (¼"), see Fig. 5. Then rout a 1/8" round-over on all four edges.

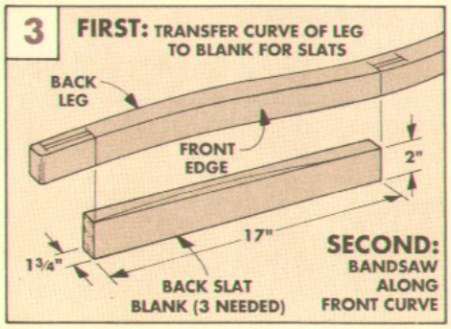

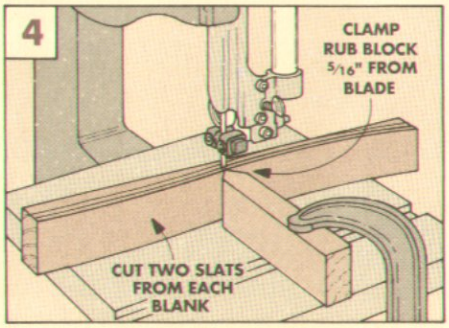

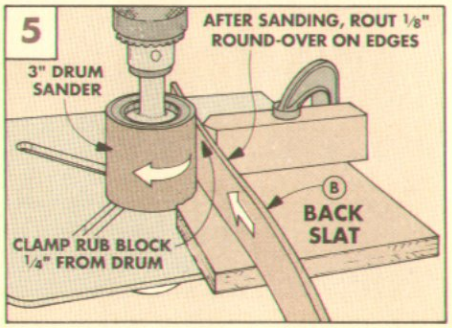

BACK RAILS

The back legs of the Rocking Chair are held together by three rails. The top two rails also hold the vertical back slats in place. The bottom rail supports the back of the seat.

OVERSIZE BLANKS. I began all three back rails by cutting a piece for each to finished width and length. Note: The rails are all cut to the same length, see Fig. 6. But they're *not* all the same width or thickness.

The **upper back rail (C)** and **lower back rail (D)** are 1¾" thick so they can later be cut to a curved shape.

Since the **back seat rail (E)** is *not* curved, it can be cut from ¾"-thick stock.

CUT TENONS. It's easiest to cut the tenons on the ends of all the pieces before cutting the top two rails to their final curved shape.

Note: The tenons on the upper back rail and lower back rail (the two thicker pieces) are cut the same — they're *offset* on the thickness of the workpiece, see Fig. 6a. But on the back seat rail (E), the tenons are *centered* on the thickness.

After the tenons are cut on all three pieces, set aside the back seat rail (E) until the chair back is assembled.

LAY OUT ARCS. Now the other two pieces can be bandsawn to an arc. To lay out this arc, first cut a template (I used poster board) with a 60"-radius arc, see Fig. 7.

Then place the template on the inside edge of the workpiece to draw the inside arc. Move the template to the outside edge to draw the outside arc, see Fig. 8.

After the two rails are sawn to the curved shape, sand them to finished thickness (¾") using a drum sander in the drill press.

DRILL MORTISES. To hold the back slats in place, a series of matching mortises is drilled in the upper back rail and lower back rail, see Fig. 9. Note: The mortises are drilled on the *facing* edges of each piece — the lower edge of the upper rail, and the upper edge of the lower rail.

To keep all the mortises an equal distance from the edge of the rail, I used a platform with a guide pin on the drill press table, see Mortising Tip at right below.

ASSEMBLE CHAIR BACK. Now all the back parts can be assembled. I started by assembling (but not gluing) the back slats in between the upper and lower back rails.

Then assemble this unit (and the back seat rail) between the back legs, refer to the drawing in the upper left corner of the facing page. Glue all the tenons in the mortises, then clamp across each of the three rails.

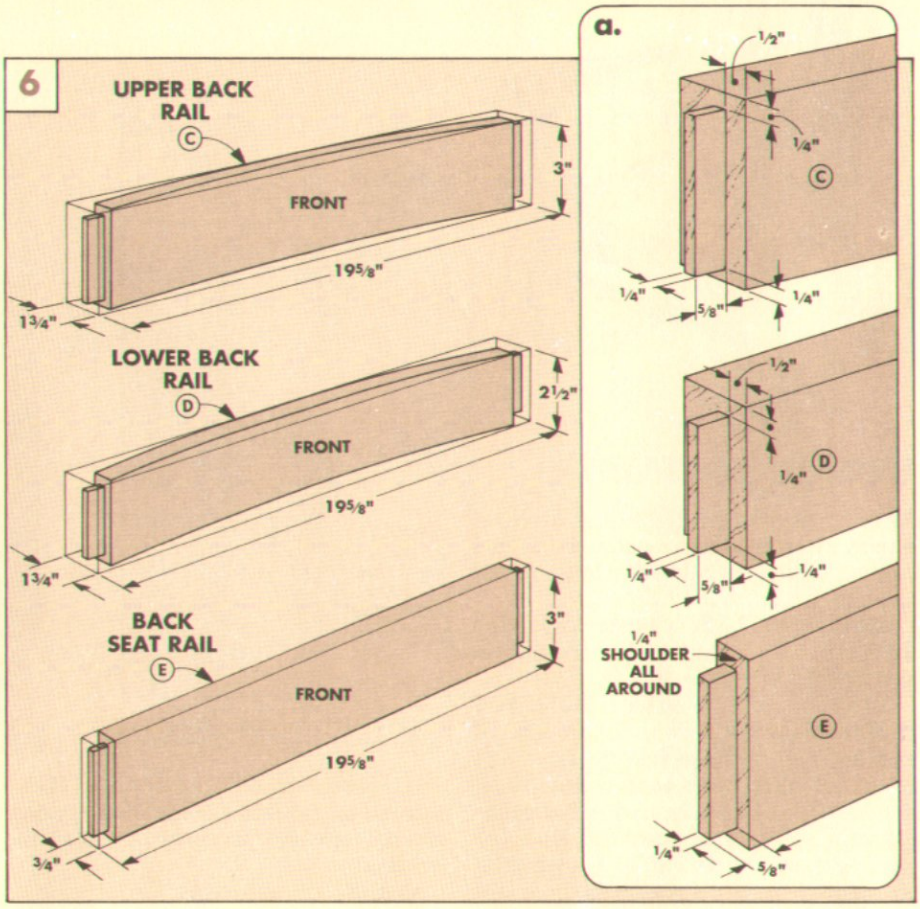

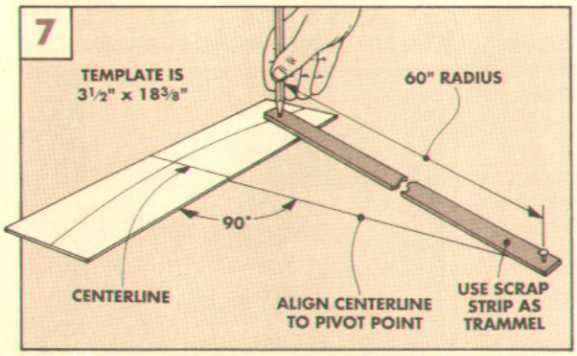

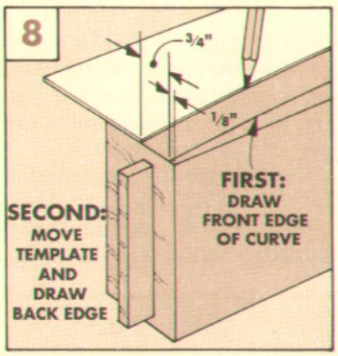

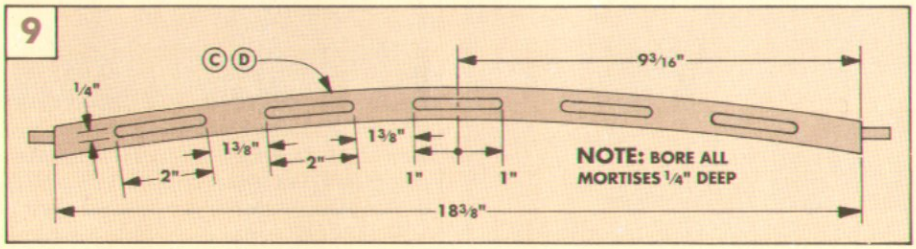

MORTISING TIP

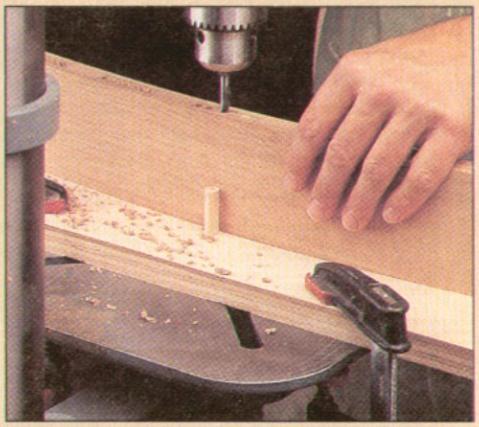

A short dowel in a plywood base acts as a guide pin when boring mortises on a curved workpiece. Slide the workpiece along the pin for mortises an equal distance from the edge.

FRONT ASSEMBLY

As the glue was drying on the back assembly, I began work on the chair front. This consists of two legs connected by a seat rail and a stretcher.

LEG BLANKS. The front legs are as solid as the curved back legs. That's because they're also 1½"-thick, see Fig. 10.

After cutting each **front leg (F)** to finished dimensions, mark the top inside edge of each leg. This will help orient the legs when laying out the mortises on the sides. (Note: You have to make a "mirrored" set of legs.)

RAIL & STRETCHER MORTISES. Each leg has four mortises, see Fig. 10. One mortise on the inside is for a tenon on the front seat rail. A second, shorter mortise below the first is for the front stretcher.

A third mortise is located on the back of each leg (adjacent to the first two mortises). This is for a tenon on the side seat rail.

After these three mortises are laid out on the leg, bore them the same depth (¾").

Shop Note: I used a ¼" mortising bit in the drill press to bore all three mortises. Then I squared up the ends of each mortise with a chisel. (You could round over the ends of the tenons, instead.)

ARM SUPPORT MORTISES. The last mortise on each leg is a long one that's open at the top end, see Fig. 10. This accepts a tenon on the arm bracket (J), refer to Fig. 13a. Note: I used a ½" mortising bit and bored this mortise to a depth of 1" by making a long row of overlapping holes, see detail in Fig. 10.

RAIL & STRETCHER. After the mortises are drilled, rip one piece of ¾"-thick stock to finished width for the **front seat rail (G)**, and one for the **front stretcher (H)**. Then cut both pieces to the same length (21¼"), see Fig. 11.

CUT TENONS. Next, cut a tenon on both ends of the front seat rail and the front stretcher, see Fig. 11a. To do this, I used a dado blade in the table saw. Sneak up on the the thickness until it fits the mortise snugly.

ASSEMBLY. After cutting the tenons, glue the rail and stretcher in the mortises between the front legs. Then set the assembly aside until the side rails are complete.

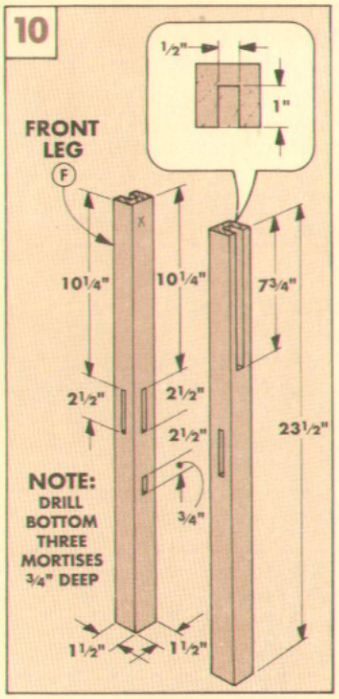

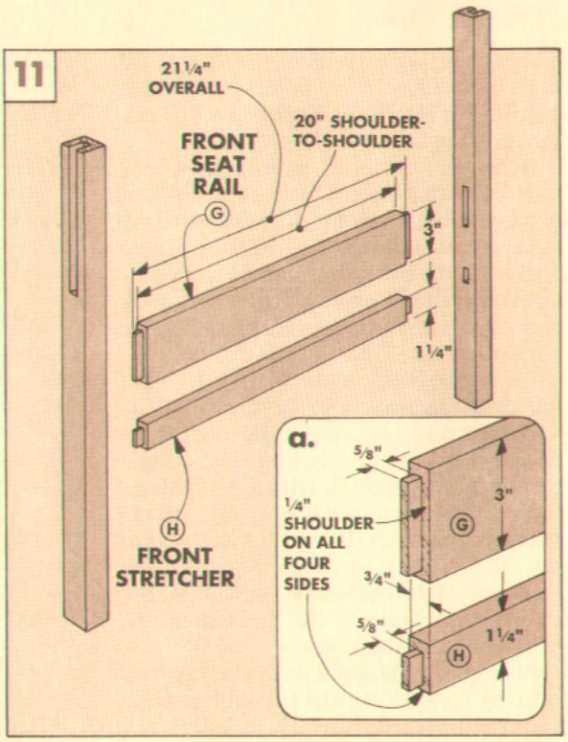

SIDE RAILS

The next step is to connect the front and back assemblies and create a chair.

RAIL BLANK. First cut two **side rails (I)** to finished width from ¾"-thick stock, see Fig. 12. Then, cut them to length with a 3° miter on each end, see Figs. 12 and 12a.

LAY OUT TENONS. To lay out the tenons, first make a mark ⅝" from the long point of each end, see Fig. 12a. Then, draw a line at 3° to this mark for the *shoulder* of the tenon.

Now draw two parallel lines to indicate the *thickness* of the tenon, see Fig. 12a. From the shoulder mark, extend these lines at a 3° angle to the end of the rail.

CUT TENONS. The angled tenon can be cut by hand with a tenon saw, then cleaned up with a chisel. Or, use the Angled Tenon Jig on the router table as shown on page 14.

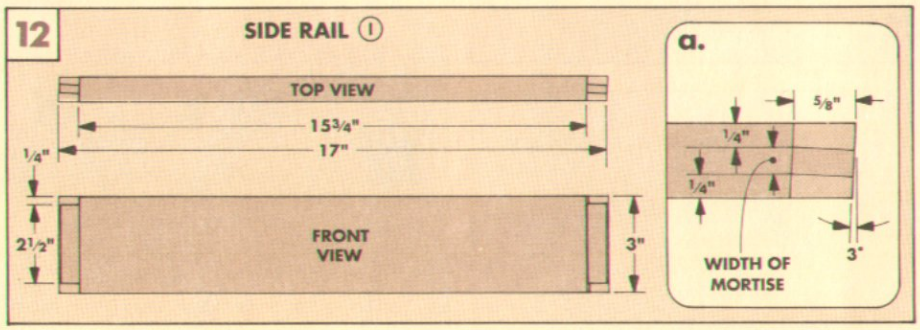

CHAIR ASSEMBLY

The Rocking Chair has two main assemblies: a back and a front. After these are completed, the two side rails are glued and clamped in between to make a chair.

ARM RESTS

When the back and front assemblies are connected, the project is almost a chair. But it wouldn't be a very comfortable chair without a pair of arm rests.

ARM BRACKETS. To support each arm rest at the front, I added an arm bracket. The **arm brackets (J)** each start out as a rectangular blank of ¾"-thick stock, see Fig. 13.

TENONS. The next step is to cut a tenon along one side and one end of the blank, see Fig. 13a. (The tenons are more like tongues — they don't have very wide shoulders.)

I used a dado blade in the table saw to cut each tenon. First position the rip fence to the desired tenon length. Then make two passes over the dado blade, flipping the piece between passes. Sneak up on the height of the dado blade until the tenon fits the mortise in the front leg, see Fig. 13a.

Then cut all four tenons to this thickness.

DECORATIVE ARC. Complete the arm brackets by cutting a decorative arc on the outside edge, see Fig. 13.

Next, trim back the tenon on the top *outside* corner and also the bottom *inside* corner of each bracket, see Figs. 13 and 13a. This creates a shoulder that hides the joint line between the tenon and the mortise.

ARM REST. When the arm brackets were complete, I began work on the two **arm rests (K)**. First cut the blanks to rectangular shape, see Fig. 14. Next, make an angled cut to remove the back outside corner of each blank.

ARM REST NOTCH. When each blank has been cut to shape, cut a small notch in the back inside corner, see Fig. 14. This allows the arm rest to "wrap around" the back leg, refer to Fig. 18.

BACK LEG LEDGE. The back of the arm rest is supported by a small triangular "ledge" cut in the back leg, see Fig. 15b.

To locate the position of this ledge, rest the front of the arm rest on the front leg and support the back of the arm rest on a 10"-long temporary spacer, see Fig. 15. Now draw a pencil line around all the edges of the arm rest, see Figs. 15 and 15a. Then chisel between these lines to form the ledge.

FRONT MORTISE. When the ledges are cut, the arm brackets can be glued into the mortises in the front legs, see Fig. 13a. Then place the arm rest in position in the ledge.

Now reach under the *front* of the arm rest and trace around the tenon at the top of the arm bracket, see Figs. 16 and 16a. This shows where to drill a mortise on the underside of the arm rest. Drill the ⅝"-deep mortise to match the thickness of the tenon (½").

PINS & SCREWS. Finally, the arm rests can be attached to the chair. To keep the tenon in place in the mortise, I glued the joint and drove a dowel into the tenon through a hole in the edge of the arm rest, see Fig. 17.

Secure the back of the arm rest with a woodscrew and plug it with a dowel, see Fig. 18.

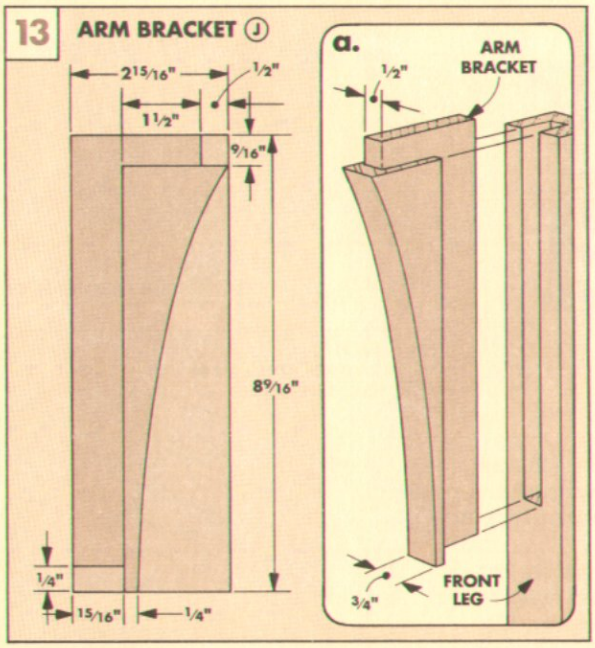

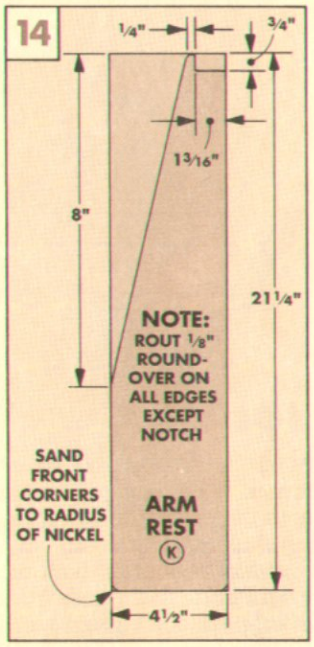

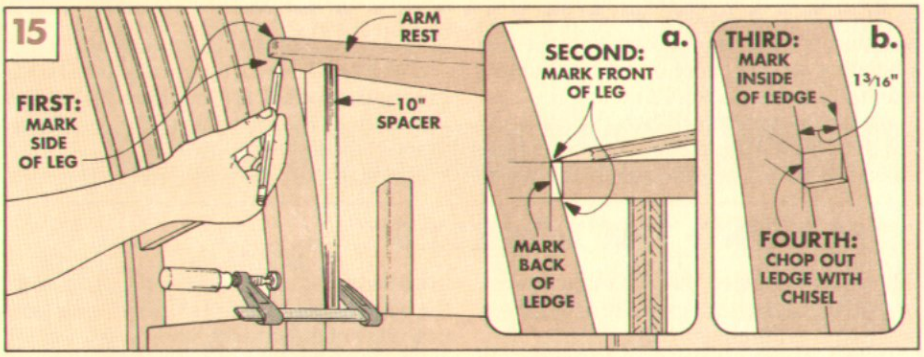

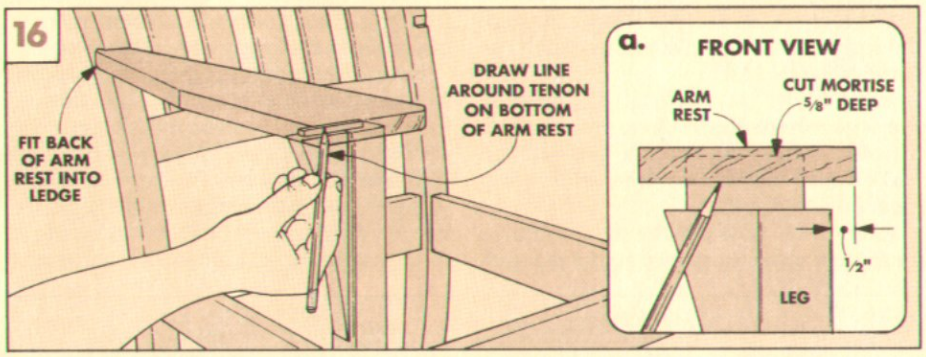

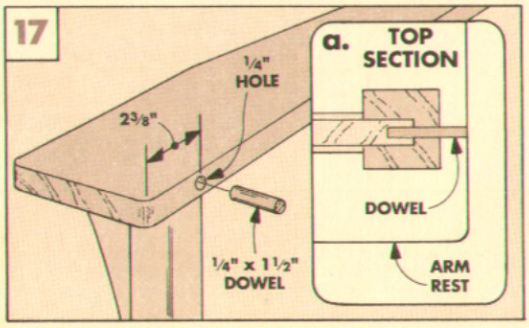

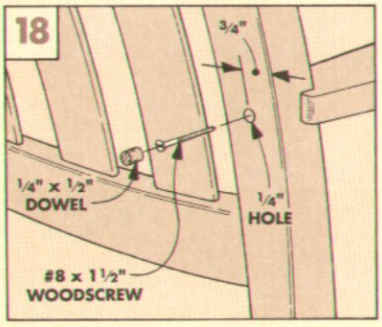

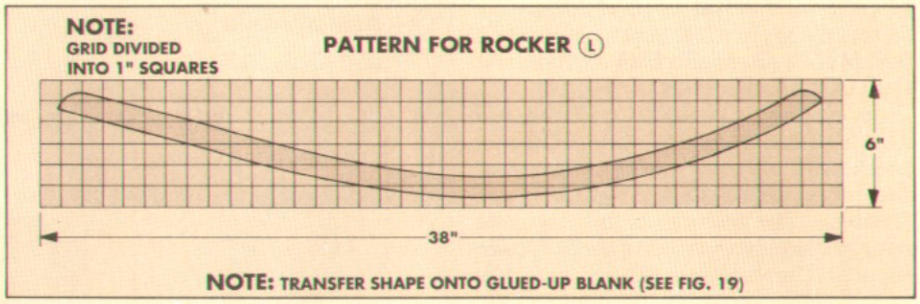

ROCKERS

At this point the project has evolved into an arm chair. By adding a pair of curved rockers to the bottom of the legs, it becomes a rocking chair (without a seat).

BUILT-UP BLANKS. Both rockers are cut from a blank that's made from three pieces of ¾"-thick stock glued together, see Fig. 19. This forms a 2¼"-thick blank. (Another way to make the rockers would be to start with thin, wide strips, then laminate them in a bending jig. For more on this technique, refer to *Woodsmith* No. 72.)

TRANSFER PATTERN. When the glue has dried on the oversize rocker blanks, transfer the shape from the grid pattern (above) to the side of one of the blanks, see Fig. 19.

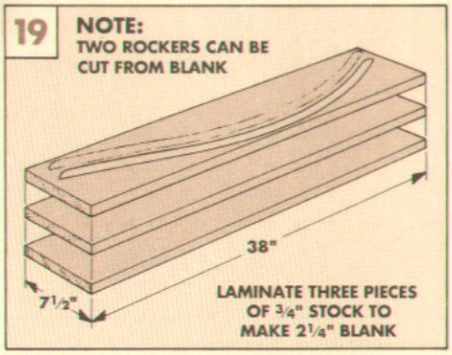

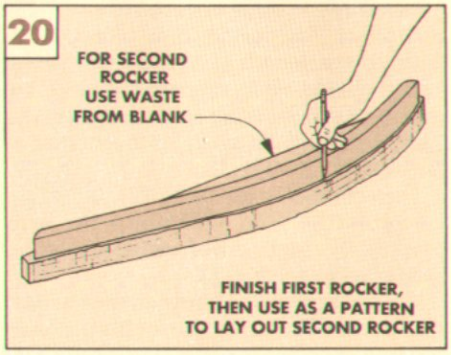

SAW & SAND. Now it's just a matter of bandsawing the **rocker (L)** to within 1/16" of the pattern line. Then sand up to the pencil line to smooth out the curves.

Now use the completed first rocker as a pattern to lay out the second, see Fig. 20. Then repeat the saw and sand procedure.

Note: It's important that both rockers be shaped exactly the same. Otherwise, when the Rocking Chair is assembled, instead of just rocking, the chair could also walk.

ATTACHING THE ROCKERS

When I was satisfied that the rockers were shaped identically, I prepared to attach them to the legs of the chair.

The front and back legs were built a couple inches longer than needed. This was done so the legs can be cut to length to match the curve of the rocker.

MARK FRONT LEG. To locate the point on the legs where the rockers attach, first measure down from the side seat rail and make a mark to indicate where the *front* leg is cut off, see Fig. 21.

MARK BACK LEG. For the most accurate measurement on the curved *back* leg, I used a two-step procedure. First, I made a mark on the edge of the back leg to indicate the bottom edge of the side rail, see Fig. 21. Then I used a straight edge to measure 8¾" down from this mark, and made a second mark at this point on the inside edge of the back leg.

Note: The procedure for measuring down from the side rail is not as critical as following the *same* procedure on *both* back legs.

POSITION ROCKERS. Now position the rocker across the legs so the top edge of the rocker aligns to the marks on the legs, see Fig. 21. There should be a 1½" overhang at the front, see Fig. 22a. Draw a line across the legs using the rocker as a guide for the pencil.

CUT OFF LEG BOTTOMS. Now the legs can be cut off at the pencil line. To get a clean, straight cut, I used a small block clamped to the leg as a saw guide. Then, I sanded the bottoms of the legs for a perfect fit with the rockers, see Shop Notes on page 16.

ATTACH ROCKERS. To fasten the rockers to the chair legs, I used woodscrews plugged with short lengths of dowel, see Fig. 22a. A bar clamp between the top of the side rail and the bottom of the rocker holds the rocker in place while drilling a pilot hole for the screw and a counterbore for the plug, see Fig. 22a.

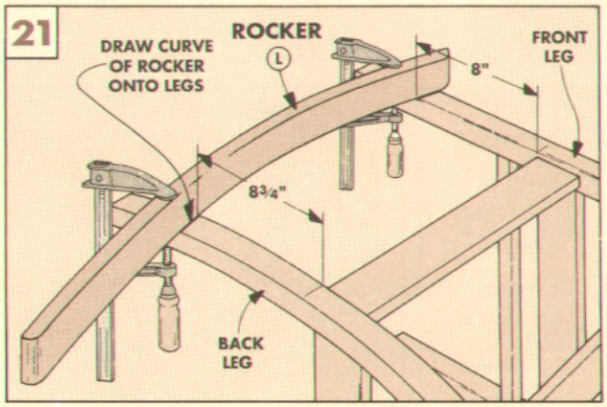

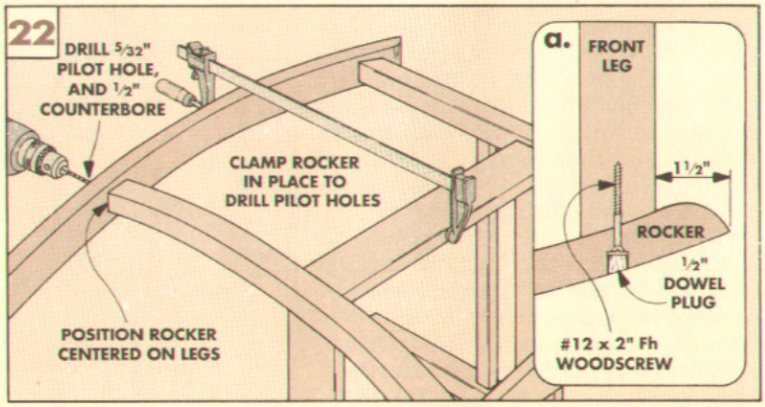

CHAIR SEAT

The seat is just a plywood platform that rests on four cleats inside the chair opening. The platform is upholstered with fabric-wrapped foam, see Fig. 23.

CLEATS. To make the cleats, start by ripping four strips of 3/4" stock to finished width (3/4"). Then cut all four **seat cleats (M)** to the same length (15").

Before installing the cleats, drill six countersunk shank holes in each cleat (four for the screws into the rails, two for the screws into the platform), refer to Fig. 23b and the Exploded View on page 7.

Then glue and screw the cleats to the inside of the seat opening. Note: Center the cleats left to right on each rail. Also, position them 1/2" down from the top edge of each rail, see Fig. 23b.

SEAT PANEL. Now the **seat panel (N)** can be cut to sit on the cleats. To do this, start with an oversize piece of 3/4" plywood. Then make a taper cut along each side of the blank so the platform is 1/16" smaller in both dimensions than the opening, see Fig. 23a.

Also, in order for the panel to fit around the legs, a small notch must be cut in all four corners, see Fig. 23a.

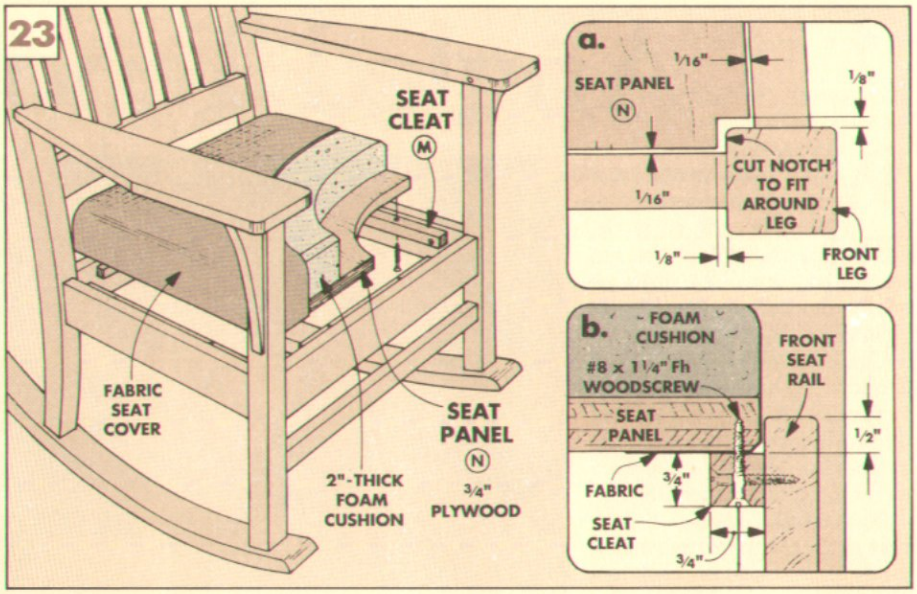

FOAM & FABRIC. Before screwing the seat panel to the chair, I upholstered it with fabric over a cushion of foam, see box below. To keep the foam from shifting around on the panel, I mounted it with spray adhesive.

But you might prefer to stop after cutting the panel. Then you could just take the seat to a professional upholsterer.

UPHOLSTERING THE SEAT

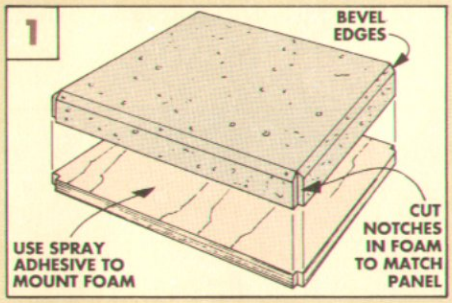

First cut a piece of 2"-thick high-density foam to the same size as the plywood panel. (I used the band saw.) Also cut a small notch in each corner to match the platform.

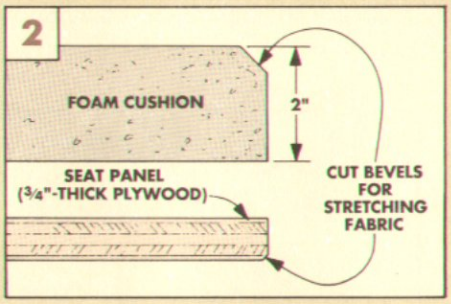

Cut a chamfer around the bottom edges of the plywood and the top edges of the foam. These let you stretch the fabric more easily, and give the seat a more finished look.

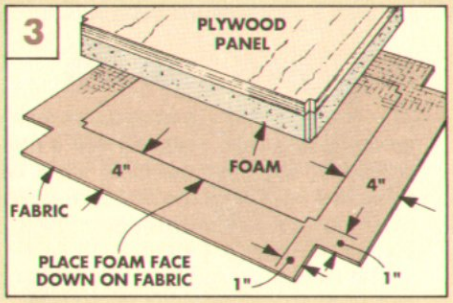

Attach the foam to the plywood with spray adhesive. Then cut the fabric 8" larger than the plywood. Center the foam on the fabric and cut a square out of each corner.

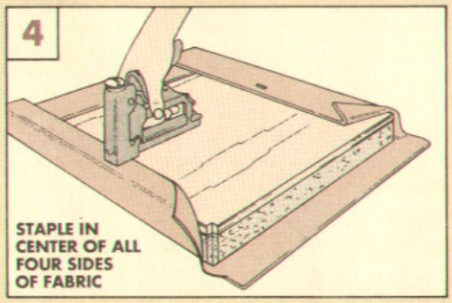

Start with one side of the fabric, fold it over the plywood and staple it in the middle. Go to the opposite side, stretching the fabric tight before stapling. Staple all four sides.

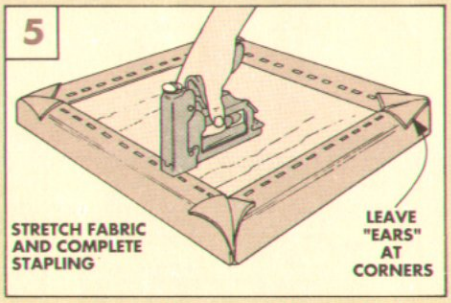

Complete stapling around the seat bottom, leaving the corner flaps open. Before driving each staple, stretch the fabric tight, being careful to avoid dimples in the foam.

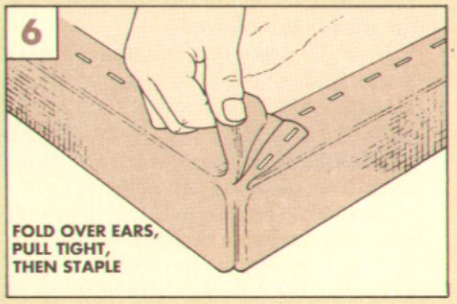

Now work on the ears at the corners. Fold the edge of the fabric to make a pleat, then pull up tightly through the corner notch. Fold the pleat over and staple into the panel.

Angled Tenon Jig

When you want to use a mortise and tenon joint to join two pieces at an angle, you have a choice to make: cut an angled tenon or bore an angled mortise. I would always choose the angled tenon.

The challenge is figuring out the best way to cut the tenons at an identical angle at *both* ends of the workpiece — with the least amount of fuss. So I came up with a jig for the router table.

For the Oak Rocking Chair on page 6, the tenons at each end of the side rails have to be cut at a 3° angle. The problem is the angled tenons at each end must be parallel, and so must the shoulders, see the inset photo.

But with this router table jig, angled tenons up to about 1" long can be cut with just a straight bit. And by following a fairly simple procedure, the shoulders and tenons are cut parallel. And at the exact same angle.

The jig can be used for other projects, too, because it's adjustable for different angles.

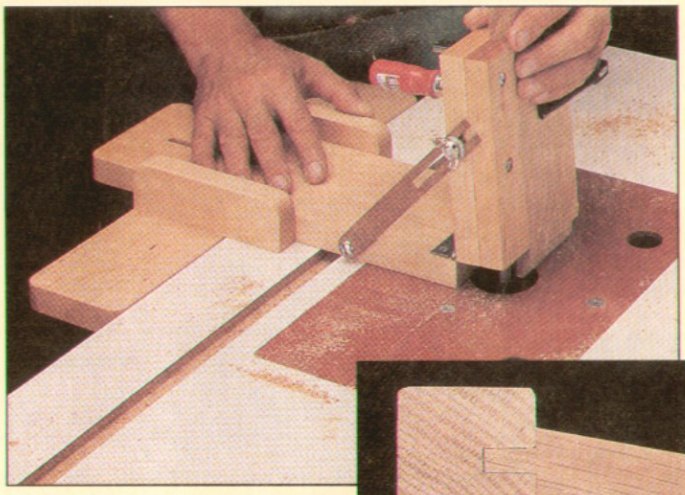

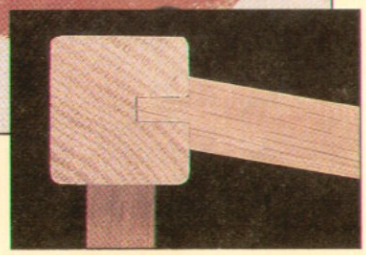

ANY ANGLE. This angled tenon jig holds the workpiece at any angle (up to about 45°) from vertical, see photo of jig above. Then, as the jig is run along the front edge of the router table, a perfect angled tenon can be routed on the workpiece with just one pass in each direction. (See Using the Jig on the facing page for the steps involved in making an angled tenon.)

ADJUSTABLE THICKNESS. Besides being adjustable to cut tenons at different angles, there's another feature that makes this jig useful. It can also be used to cut tenons of just about any thickness, on almost any size stock.

What makes this possible is a carriage bolt in a slot, and a wing nut. These hold the two main parts of the jig together and allow the working end of the jig (the pivoting face) to be positioned at different distances from the router bit.

MATERIALS. I made the jig from a couple short lengths of scrap hardwood plus a handful of hardware. A pair of butt hinges permits the jig to tilt, and a pivot arm made from Masonite securely holds the pivoting face at an angle while the tenon is being routed.

MAKING THE JIG

The Angled Tenon Jig consists of two main assemblies: a base assembly and a runner assembly. The base assembly has a **base** piece that lies flat on the router table, and a **pivoting face** that holds the standing workpiece at an angle, see Fig. 1.

The runner assembly is attached to the end of the base assembly. It consists of a **runner** that slides along the front of the router table to keep the base a fixed distance from the router bit.

Attached to the runner are a pair of **guide blocks** that hold the base perpendicular to the front edge of the table.

Note: To make the jig more comfortable to use, I rounded over the edges of the guide blocks, see Fig. 1. Also, I sanded a radius on each corner of the runner assembly pieces, and the outside corners of the base. Rout and sand these pieces before assembly.

ASSEMBLY. To assemble the parts, start by attaching the guide blocks to the runner. Install the screws from the bottom of the runner, using the base as a spacer to keep the blocks the correct distance apart, see Fig. 2.

Then hinge the pivoting face to the inside end of the base, see Fig. 3. (I used a pair of 2"-long butt hinges.) Now, attach the base to the runner with a 2"-long carriage bolt

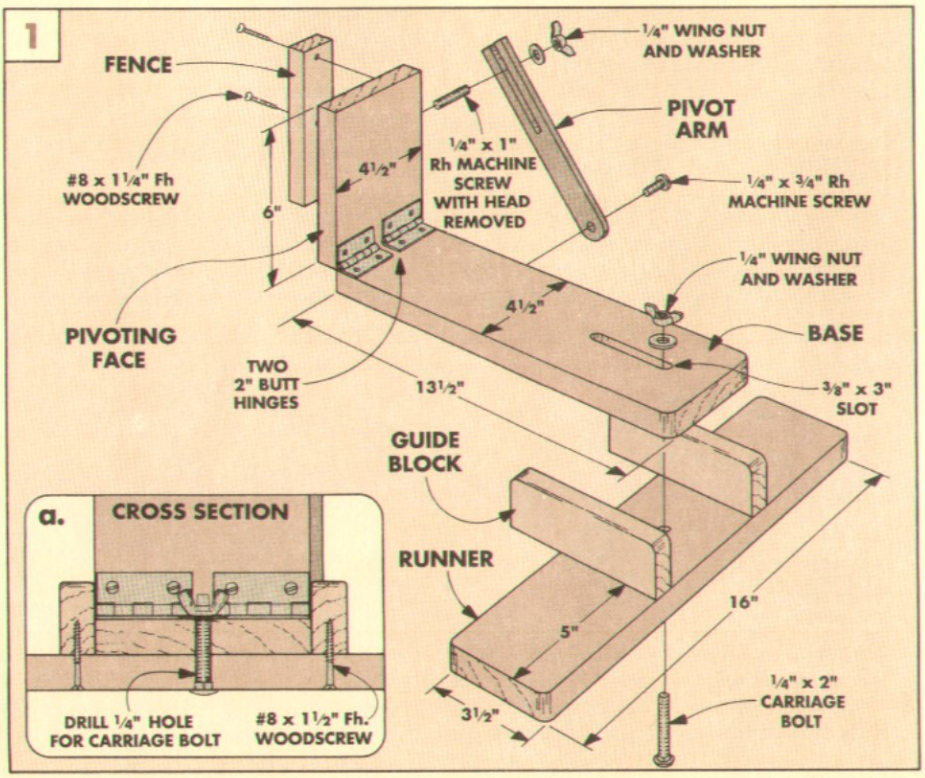

through a hole in the runner and a slot in the base, see Figs. 1 and 2.

PIVOT ARM. To support the pivoting face at an angle, I cut a **pivot arm** from a piece of ¼"-thick Masonite, see Fig. 3. The arm has a pivot hole in one end and an adjustment slot in the other end.

Cut (or sand) a radius on the lower end of the pivot arm, then attach it to the base and pivoting face with machine screws.

FENCE. Finally, cut and screw a short **fence** to the front of the pivoting face, see Fig. 4. This holds the workpiece securely to the jig as the tenon is being routed.

As long as the fence is attached at a 90° angle to the router table, the shoulders of the tenon will be square to the end of the tenon.

Safety Note: Attach the fence to the pivoting face with the screws positioned at least 3" up from the bottom of the fence. This way, the router bit won't cut into the screws as the jig is being used.

On a tenon longer than ¾", the router bit *can* cut into the lower ends of the fence and pivoting face. That's all right because these can be replaced later if necessary — just remove them from the hinges on the inside.

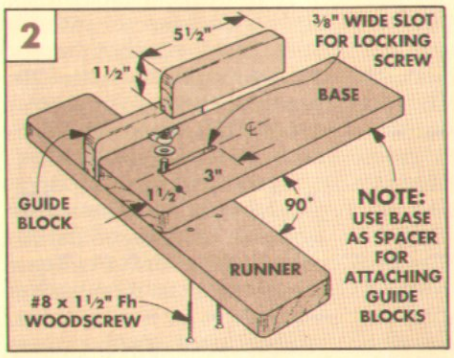

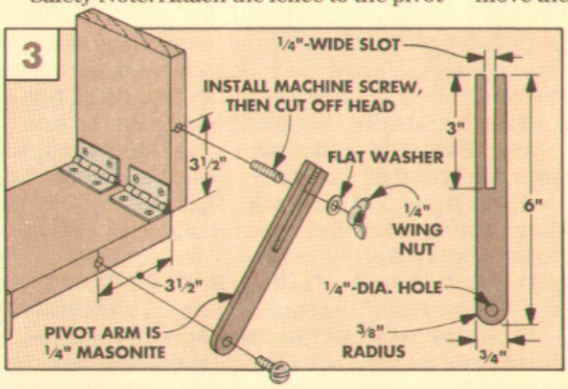

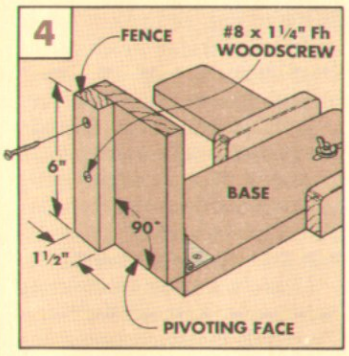

USING THE JIG

Most angled tenons can be cut in just two passes over a ½" straight bit in the router table. The first pass cuts one cheek of the tenon. Then the tenon is completed in a second pass. Only the position of the jig is moved between passes — the workpiece stays clamped on the front.

LAY OUT TENON. Before using the jig, first cut the ends of the workpiece at the correct angle. Then draw the outline of the tenon at the desired angle on the edge of the workpiece at each end.

The layout marks should indicate the angle, length, and thickness of the tenon.

SET UP JIG. When the tenon is laid out on the workpiece, the jig and router bit need to be adjusted, see Steps 1 thru 3 below. Note: *Don't* raise the router bit higher than 1" — it can cut into the hinge screws. And to prevent tear-out along the shoulder, stick a piece of masking tape to the face, see Step 2.

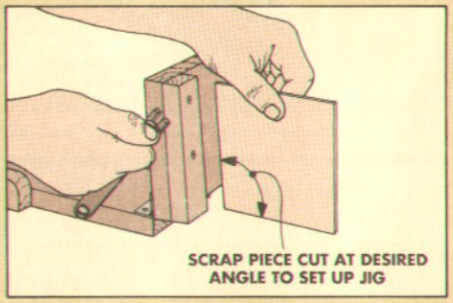

1 *Miter a piece of scrap to use as a guide for setting tenon angle. Then tighten the wing nut on the end of pivot arm.*

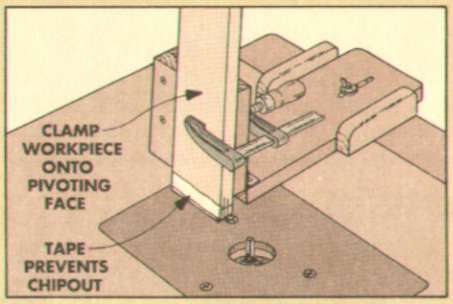

2 *Clamp workpiece to jig so the edge is tight to the upright fence. The end of the workpiece should be flat on router table.*

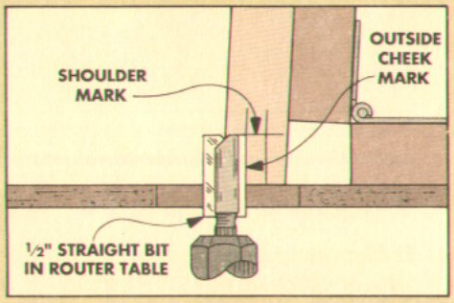

3 *Slide the body of the jig so the bit aligns to the outside cheek mark. Raise the bit to align to the shoulder mark.*

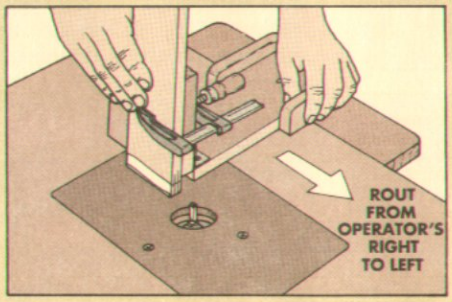

4 *Cut the outside of the tenon by holding the runner tight to the front of the table and sliding the jig from right to left.*

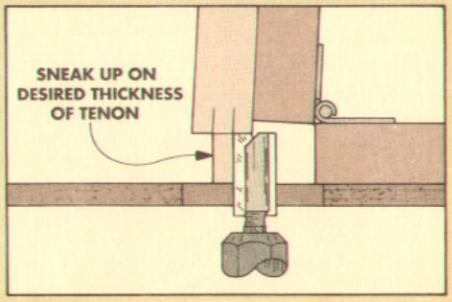

5 *To complete the tenon, adjust the jig so the bit aligns to the inside cheek mark. Do not change the height of the bit.*

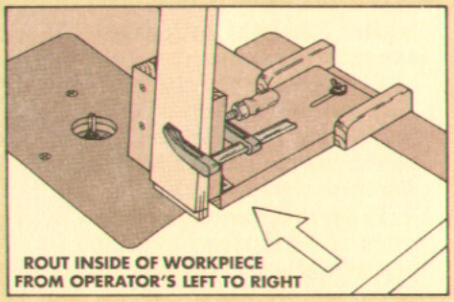

6 *To rout the inside cheek, you have to slide the jig in the opposite direction (from left to right) to avoid kickback.*

Shop Notes

GLUING AN OCTAGON

■ When cutting miters for an eight-sided frame (such as the Oval Mirror on page 18), there's always a good chance for error.

Each of the pieces requires two miters (one on each end) for a total of 16 cuts. If the miter gauge is off just ¼°, the combined gap would be about ¼" when the pieces are assembled.

There's a trick to creating tight joints all around the frame. The trick involves assembling two "half-frames," then cutting the ends of each half-frame to fit together tightly, see Fig. 1.

HALF-FRAMES. Start by cutting all eight frame pieces. Then glue up four pieces (half the frame).

Shop Note: When assembling, I don't use clamps — just hand pressure. Apply glue to the mating surfaces and press them together for about 30 seconds.

PLYWOOD CARRIER. After the half-frames are dry, I use a piece of plywood as a cut-off table for the half-frames, see Fig. 2.

To cut the plywood, set up the fence on the saw a little wider than the glued-up half-frame and rip the plywood so the edges are parallel. Now the half-frame is taped to the plywood with double-sided carpet tape.

Here's the key to the technique. If the miters were all cut perfectly, the two ends would align flush with the edge of the plywood. But since the ends may be off, position the half-frame so the two long corners extend beyond the edge of the plywood and the two short corners are flush to the edge, see Fig. 2a.

MAKING THE CUTS. Next, run the plywood carrier through the table saw, trimming off the long corners of the half-frame. Repeat the procedure on the other half-frame. Now the two halves can be glued together without a gap.

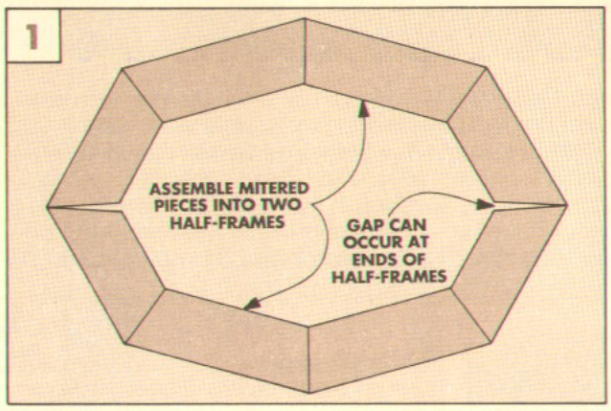

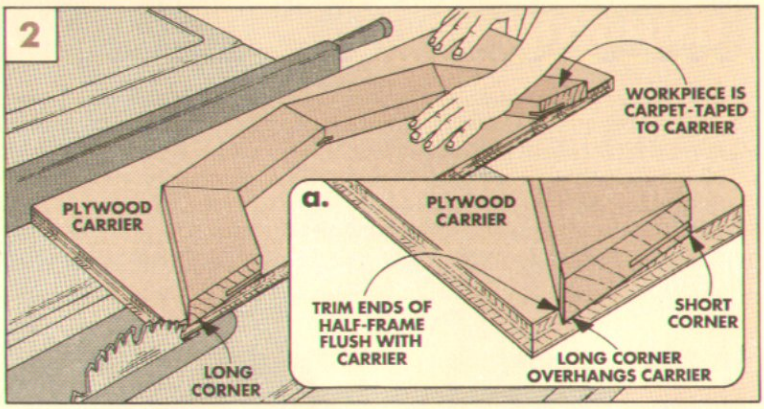

FITTING LEGS TO ROCKERS

■ After cutting the legs of the Oak Rocking Chair (shown on page 6), I turned the chair over and set the rockers on the legs.

But there was a problem. After cutting the bottom of the legs square, they needed to be sanded to a slight arc to match the curve of the rockers.

To prevent over-sanding, I used the rockers like giant sanding blocks. This way, the legs can be sanded to perfectly match the curve of the rockers.

To do this, attach adhesive-backed sandpaper to each rocker where the legs will join the rocker, see Fig. 1.

Now place one of the rockers on its corresponding legs and gently sand the legs until they match the arc, see Fig. 2.

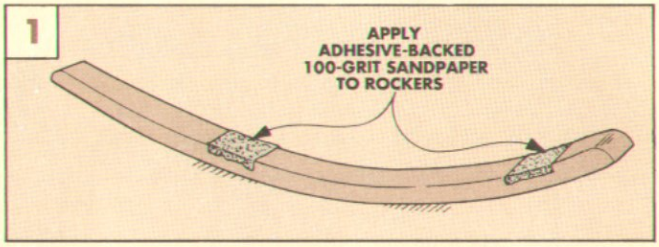

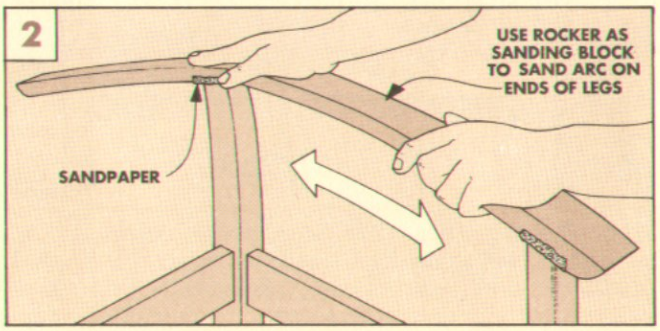

SPLINES

■ How tight should a spline be? When dry assembling the joint, if you can't push the spline in easily with your fingers, it will be too tight when there's glue in the joint. So the spline needs to be thinner. If the spline falls out when turned over, it's too loose to hold the joint together.

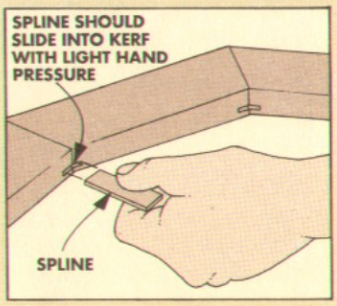

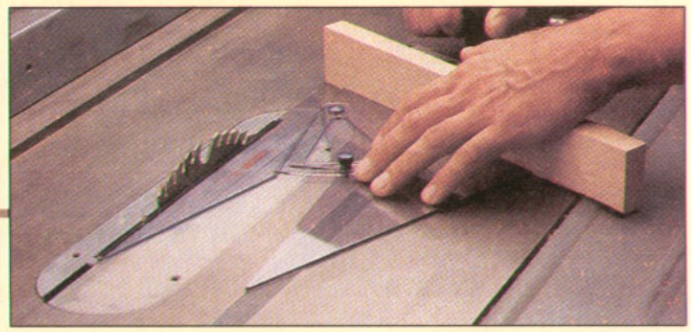

ADJUSTABLE TRIANGLE

■ To cut accurate angles with the miter gauge, I don't rely on its degree-markings — the lines are too thick to set it very accurately. Instead, I use an adjustable triangle. Its hairline markings are much finer and more accurate than those on most miter gauges.

ADJUSTABLE TRIANGLE. This clear plastic triangle is made of two pieces: a right-angle base and an adjustable arm, see Fig. 1. The arm can be set at any point between 0° and 90° in half-degrees. Each hairline marks two relative angles (for example, 30°/60°, 20°/70°) which makes setting angles much easier.

SETTING MITER GAUGE. To use the triangle, the arm is locked at the desired angle by tightening a locking nut, see Fig. 1.

Then place the adjustable arm against the left side of the saw blade, see Fig. 2. (Note: Make sure the arm rests between the teeth. The set of the teeth can change the angle.) Then align the miter gauge with the base of the triangle and lock it down.

ANGLES OVER 90°. At times you have to make a cut so the angle between the miter gauge and the blade is greater than 90°, see Fig. 3. But you can't set the triangle greater than 90°. Here, you have to do some math.

First, subtract 90 from the angle needed and lock the triangle at this number. For example, if you want this angle to be 120°, set the triangle at 30°.

Now place the *base* of the triangle against right side of the blade, move the miter gauge to the right slot, and align, see Fig. 4. Then move the miter gauge to the left slot and make the cut.

Adjustable triangles are available at most art supply stores. Or see page 31 for other sources.

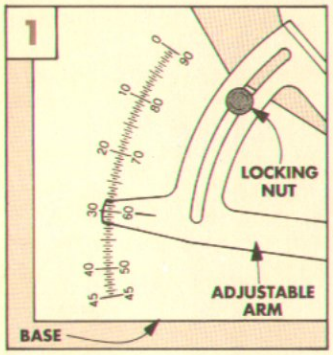

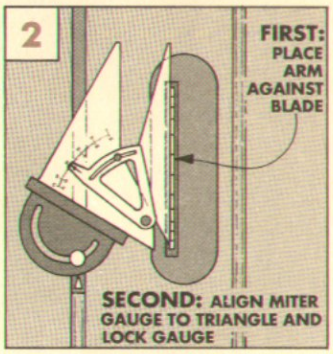

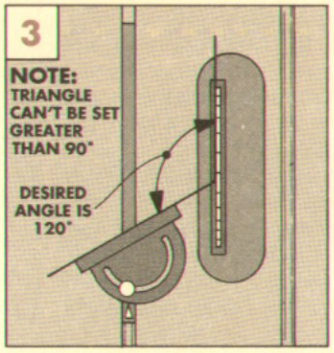

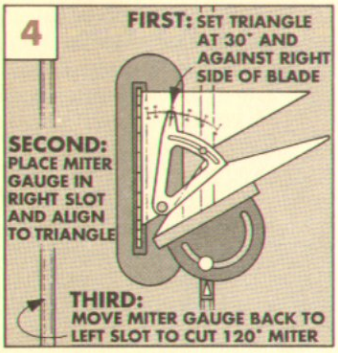

MODIFYING A BIT

■ For the Oval Mirror profile, I wanted to rout a bead in the center of the frame. To do this, I needed a round-over bit without a pilot bearing. But most round-over bits are designed to rout the edge, so they have a bearing.

At least one source has a ¼" carbide-tipped round-over bit without a bearing (see page 31).

A less expensive option is to buy a high speed steel bit (26309) and arbor set (2589) from Sears. This bit has a removable rub pilot, but there's a problem when using the bit this way.

The end where the pilot is usually screwed in isn't made to cut wood. As it spins, this flat end burns the workpiece, see photo.

To prevent the burning, I ground a concave shape on the bit using a grinding wheel, see Fig. 1. Just hold the bit with locking pliers and use the corner of the grinding wheel. Grind from the center outwards, being careful not to nick the cutting edge.

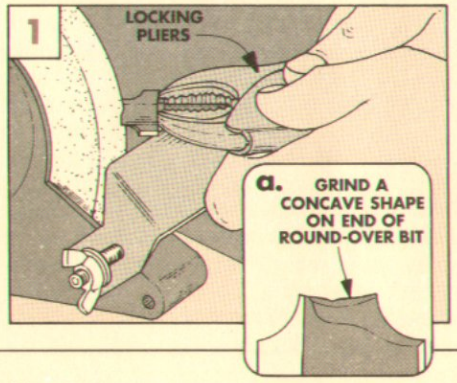

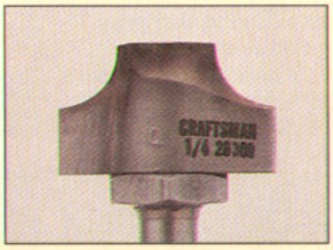

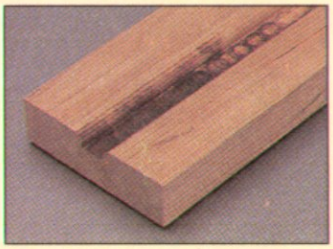

BEFORE: The bit with the flat end is difficult to push through the workpiece, and the friction it produces burns the wood.

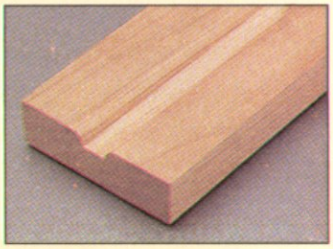

AFTER: With the end of the bit hollowed out, the cut is much smoother, and the workpiece shows no signs of burning.

Oval Mirror

How do you make an oval frame for a mirror? First, cut a number of short pieces and glue them together to form an octagon. Then rout the octagon into an oval.

The idea of building an Oval Mirror has always intrigued me. But without some kind of jig to cut the oval-shaped frame and rout the complex profiles, it's virtually impossible to make a consistent oval. So after a lot of thought (there's more to an oval than a circle), I came up with a jig that made it possible. (For more on the jig, see page 22.)

PROFILE. The most interesting aspects of this project are how the profile is created and how the frame is cut to size.

To cut a profile like this normally requires a shaper and an expensive cutter. But I molded this profile and cut the oval to size with a router (mounted in the jig) and three router bits.

To rout the profile shown here and cut the frame, you'll need a 1/4" round-over bit (without a bearing), a 3/4" core box bit, and a 1/4" straight bit.

JOINERY. The frame is made from eight pieces joined together with splined joints. I used 1/8"-thick Masonite for the splines because it's very stable and less likely to cause the joints to move during changes in humidity (a real concern in a project like this).

WOOD & FINISH. To allow enough thickness for the profile, you'll need 5/4 stock (1 1/16" actual thickness). I actually made two mirrors. The one shown here is cherry and the one on the back cover is walnut.

For the finish I applied two coats of General Finishes' Royal Finish (Satin).

MIRROR & HARDWARE. The mirror is standard 1/8"-thick mirror. Locally it cost $42. And that price included a special cutting fee for the oval shape.

To hang the mirror, I used a heavy braided picture frame wire and brass hinged hangers. For sources of the hardware and router bits, see page 31.

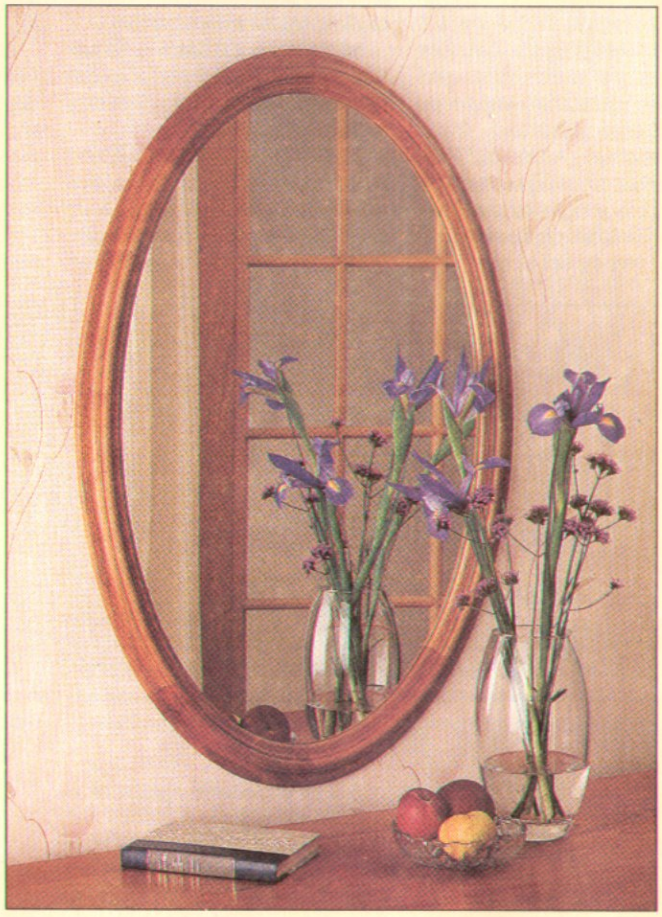

SUPPLIES

Overall Dimensions: 37"H x 25"W x 1 1/16"T

- (1) 1/8" x 2 1/2" x 10" Masonite (for splines)
- (1) 1/8" x 25" x 37" Oval Mirror (cut to fit frame)
- (1) 1/16" x 32" x 40" Standard Mat Board
- (16) #7 Glazing Push Points
- (4) 1 7/8" Hangers
- (8) #5 x 1/2" Fh Woodscrews
- (1) 20 lb. Braided Wire - 10' rgh.
- (4) 1/2" Rubber Bumpers
- (2) 1 1/8" Wall Hangers with Brads

CUTTING DIAGRAM

A	Ends (4)	1 1/16 x 5 - 12 1/2
B	Sides (4)	1 1/16 x 5 - 15
C	Masonite Splines (8)	1/8 x 5/8 - 2 1/2

1 1/16" x 5" x 60" (2.6 Bd. Ft.)

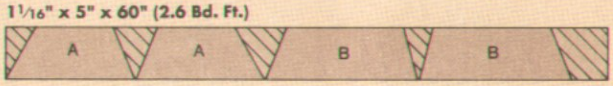

1 1/16" x 5" x 60" (2.6 Bd. Ft.)

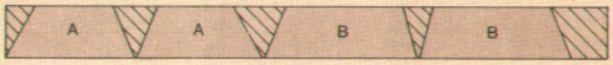

BUILDING THE BLANK

The oval frame actually starts out as an octagonal blank, see Fig. 1. Four of the pieces are identical ends (A), and the other four are identical sides (B). To cut all eight pieces, you'll need to set the saw for three different angles. (See Shop Notes on page 17 for information on cutting accurate angles.)

ENDS & SIDES. To cut the **ends (A)** and **sides (B)**, first rip all eight pieces from 5/4 stock (1 1/16" actual thickness) to a finished width of 5", see Fig. 1. Now miter one end of each piece at 22½°.

Then cut each end (A) to final length with a 30° miter at the other end, see Fig. 1. And cut the sides (B) a little longer with the other end mitered at 15°.

Once all the pieces are cut to size, the next step is to rout grooves for splines.

ORGANIZING PIECES. One thing that's important with spline and groove joinery is making sure the grooves align. So before routing the workpieces, first organize them as they're going to appear in the blank, see Fig. 1. Then draw an "X" on the face of each piece so they'll be oriented the same way.

ROUTING GROOVES. Normally, a spline is centered on the thickness of a board. But for this project, a centered spline would be exposed once the profile was routed. So to avoid this, I placed the splines off-center (⅛" from the back) on the thickness of the frame pieces, see Fig. 2.

The grooves also have to be stopped short so they won't be seen on the outside of the frame. To rout the stopped grooves, first rout one end of each workpiece in the normal, right to left manner stopping at a centerline drawn on both the router table and the workpiece, see Fig. 3. (Note: Face the "X" *away* from the router table fence.)

Then to rout the other end of each piece so the stopped grooves are on the same side, keep the "X" facing out and plunge the workpiece on the bit at the centerline and rout in the normal direction, see Fig. 4.

GLUE UP BLANK. Now cut splines from ⅛"-thick Masonite and glue up the pieces. (For more on this, see page 16.)

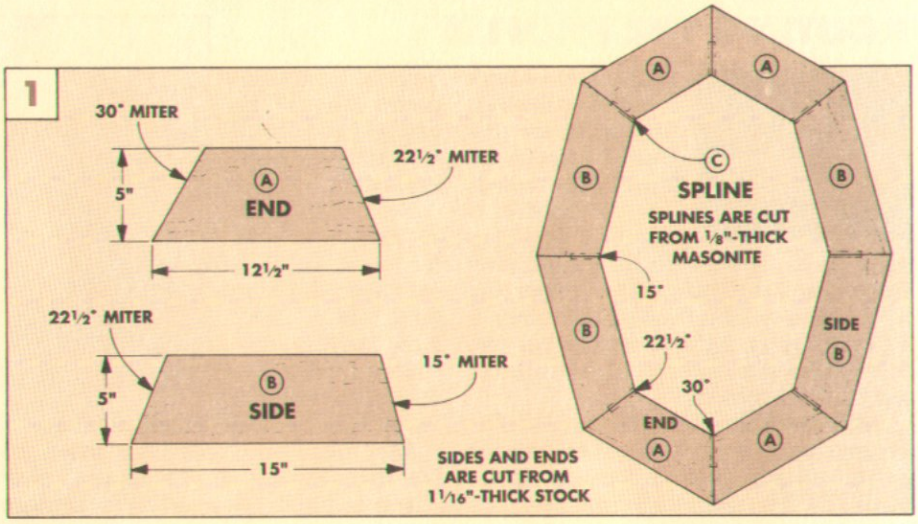

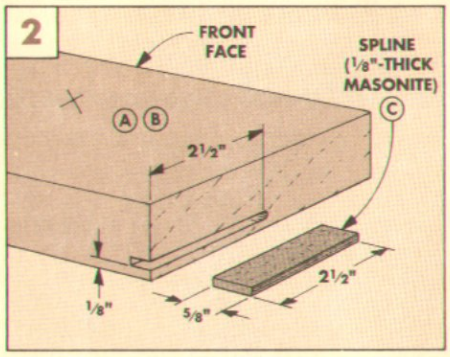

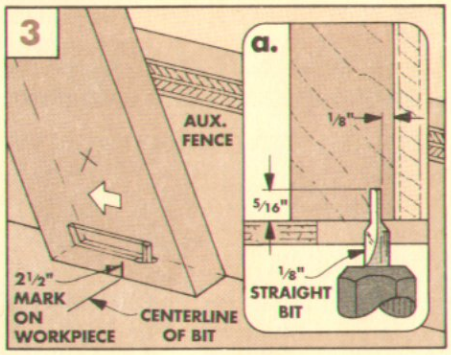

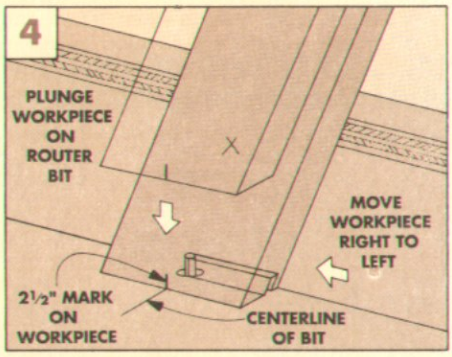

MOUNTING BLANK TO JIG

Once the glue dries, the next step is to mount the frame blank on the Oval Cutting Jig. (For more on the jig, see page 22.) To ensure the profile is routed in the center of the blank, the blank must be positioned correctly on the jig.

To do this, first drill holes for woodscrews that are used to hold the blank to the large plywood base, see Fig. 5. Safety Note: To ensure the router bits clear the screws, place the holes at the center of each piece, within ¼" of the inside edge.

Then stick small pieces of double-sided carpet tape centered on the bottom of the blank, see Fig. 5. The tape will hold the frame to the plywood once it's cut from the blank.

MOUNT BLANK. Now slip the blank over the carriage and align it to the layout lines, see Fig. 5. Then screw it to the plywood base.

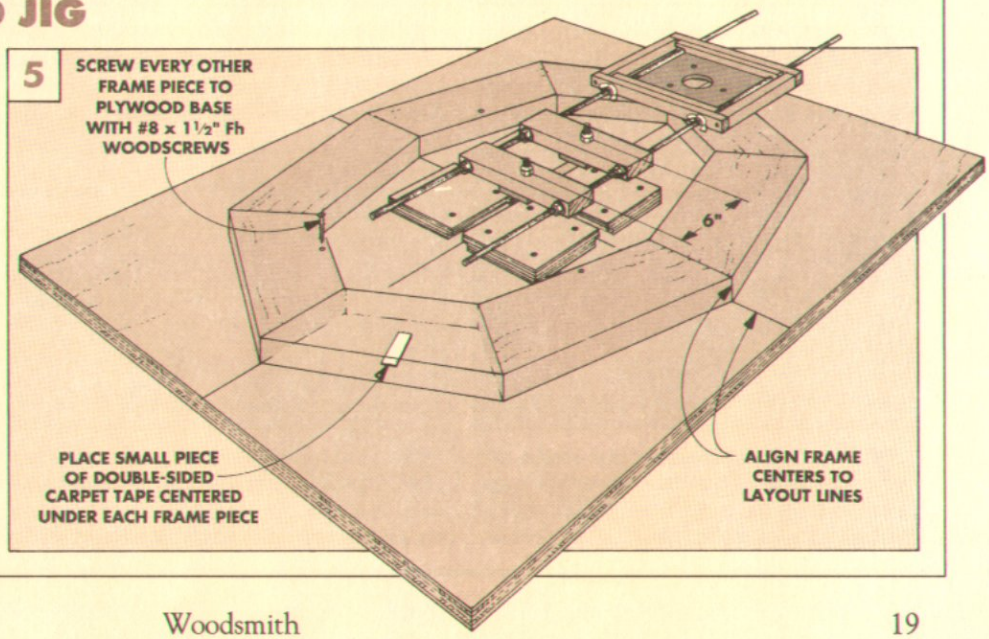

ROUTING THE PROFILE

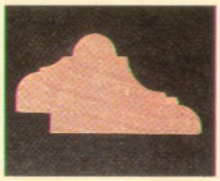

With the blank mounted on the Oval Cutting Jig, the profile and shape of the frame can be routed.

ROUTER BITS. A shaper cutter can mold the profile shown in the photo above. But you can also rout it with three router bits: a 1/4" round-over bit (without a bearing), a 3/4" core box bit, and a 1/4" straight bit. (For more on the 1/4" round-over bit, see pages 17 and 31.)

FIRST PASS. The profile is routed in nine separate steps, see below. And each step is positioned at a different location on the blank. To determine where the first pass begins, locate the center of one of the ends (A) and draw a centerline, see drawing at right.

Next, mount the 1/4" round-over bit in the router. And then set the depth of the bit to rout 1/4" deep. Now adjust the router carriage so the outside edge of the bit is on the inside of the centerline.

After the router carriage is adjusted, follow the step-by-step procedures below changing the bits and adjusting the carriage as you go. Note: When performing the following steps, always remember to start a little wide from where you want to end up, then sneak up on the final measurement.

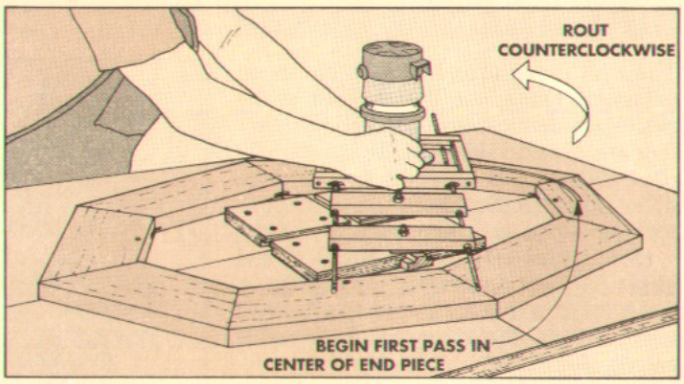

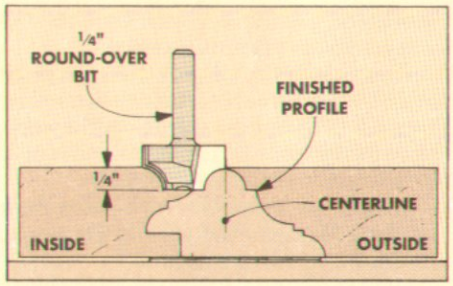

1 *With a 1/4" round-over bit in the router, position the router carriage so the outside edge of bit is on the centerline. Now rout inside half of 1/2"-wide bead.*

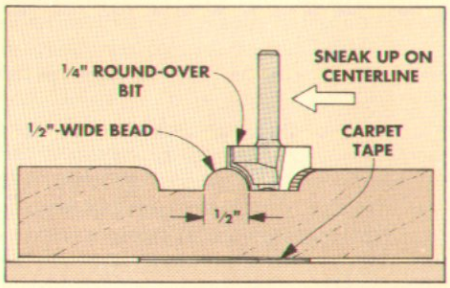

2 *Next, readjust router carriage so the inside edge of bit is approximately 1/8" away from the centerline. Then sneak up on centerline to complete 1/2"-wide bead.*

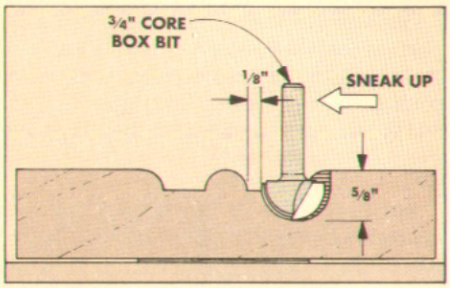

3 *Switch to a 3/4" core box bit. Adjust carriage so inside edge of bit is about 1/4" away from outside edge of bead. Sneak up on bead to create 1/8"-wide shoulder.*

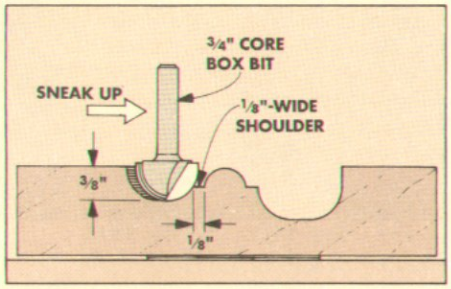

4 *Next, reposition carriage so outside edge of bit is approximately 1/4" away from inside edge of the bead. Then, sneak up on bead to create a 1/8"-wide shoulder.*

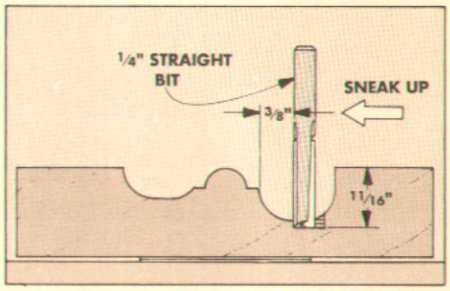

5 *Now install a 1/4" straight bit. Then adjust carriage so the inside edge of bit is about 7/8" away from the centerline. Next, sneak up to leave 3/8"-wide cove.*

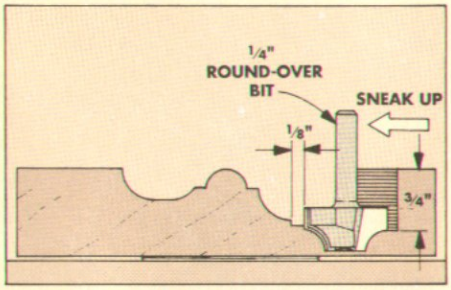

6 *Reinstall 1/4" round-over bit. Then reposition carriage so inside edge of bit is about 1/4" away from outside edge of cove. Now sneak up to leave 1/8-wide shoulder.*

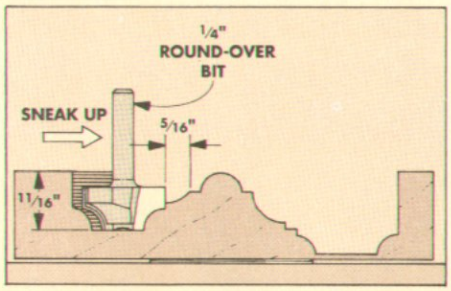

7 *Next, reposition carriage so the outside edge of the round-over bit is approximately 9/16" away from inside edge of the bead. Sneak up to leave 5/16"-wide cove.*

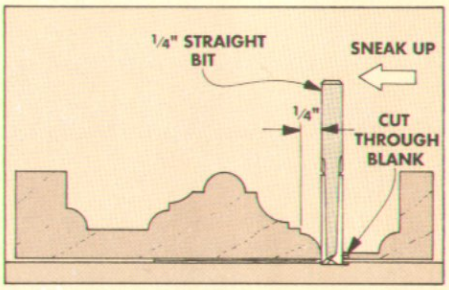

8 *Now reinstall 1/4" straight bit. Then adjust carriage so bit is about 1/16" from outside round-over. Sneak up on round-over to cut the outside edge of oval.*

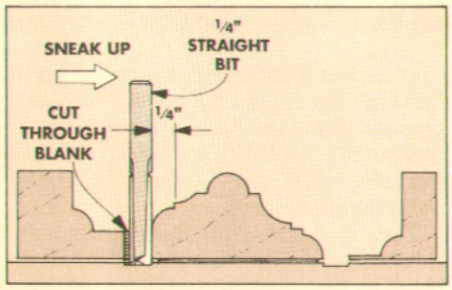

9 *To cut inside edge of oval, readjust carriage so straight bit is about 1/16" away from inside round-over. Now sneak up on round-over and cut through blank.*

INSTALLING THE MIRROR

After the profile has been routed, gently remove the frame from the plywood base. If the double-sided carpet tape won't release the frame, dissolve the adhesive on the tape by flowing a small amount of denatured alcohol under the frame.

ROUTING RABBET. The final step in making the frame is to rout a 3/8"-wide rabbet along the back inside edge for the mirror.

To do this, I used a hand-held router with a rabbeting bit, see Fig. 6. But, because the back of the frame isn't very wide, I carpet taped a small block of wood to the base of the router for additional support. Then when routing the rabbet, move the router in a clockwise direction.

FINISH. With the frame complete, the next step is to lightly sand the profile and then apply the finish.

BACKING BOARD & MIRROR. To protect the silver coating on the back of the mirror, I cut a standard mat board to use as a backing board, see Fig. 7. (I also brought this to the glass shop so they could use it as a template when cutting the mirror.)

Then to complete the project, install the mirror and backing board with 16 push points spaced evenly around the inside edge of the frame, see Fig. 8.

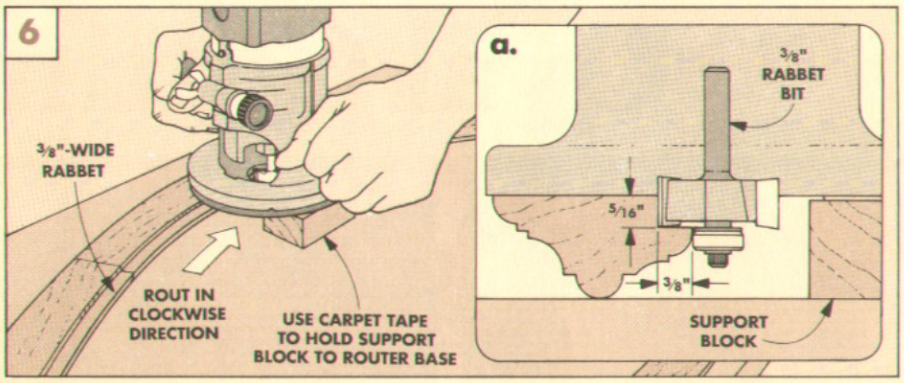

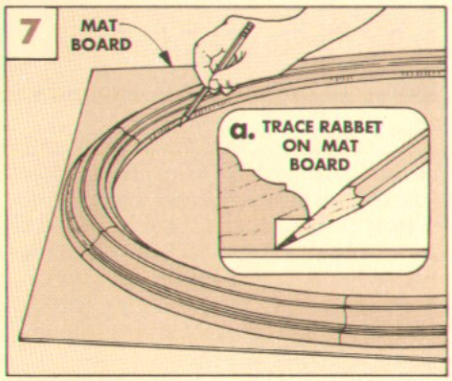

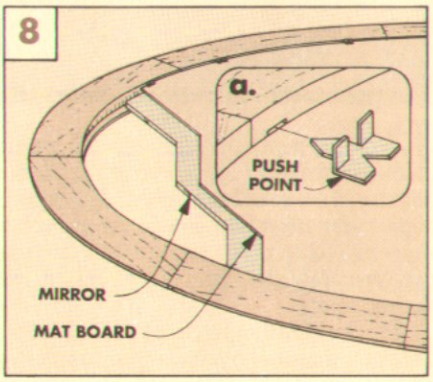

HANGING THE MIRROR

Normally a frame is hung with one wire running across the back. But the braided wire used to hang this mirror is strung in such a way that it pulls the frame in towards the center of the mirror — relieving some of the pressure the weight of the mirror has on the bottom joints.

One nice thing about this system is that it works for both horizontal and vertical mountings, see Figs. 9 and 10.

STRINGING WIRE. The first step to installing the hanging system is to screw four hinged hangers to the back of the frame, see Figs. 9 and 10. Then string braided wire through the hangers, starting at the bottom hanger, see Fig. 9a.

Now thread the wire through the top hanger, left hanger, and right hanger. Then terminate the wire back through the top hanger, and tie it off just as you did at the bottom hanger, see Fig. 9a.

Note: When stringing the wire, make sure it's tight. There should be about 1" slack in the section of wire that hooks on the wall.

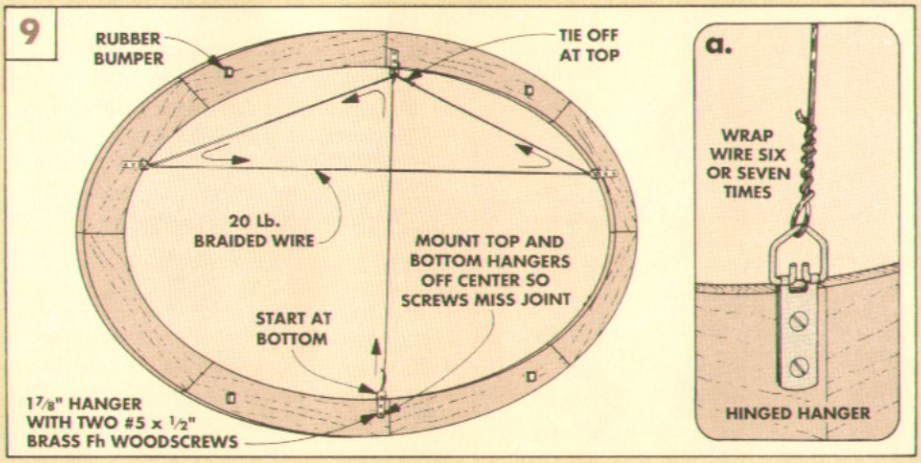

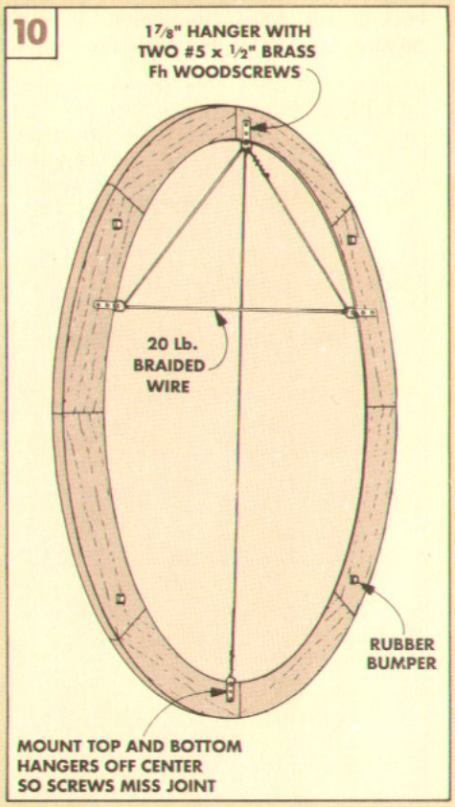

Oval Cutting Jig

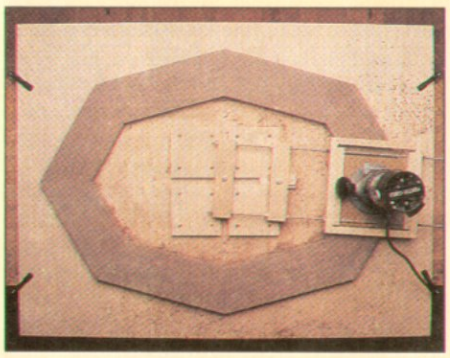

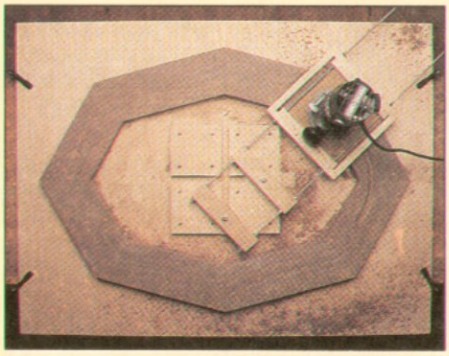

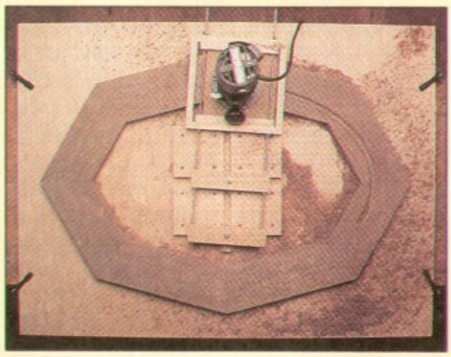

Routing a glued-up blank into a perfect oval (ellipse) requires a trammel. But not the type you might normally expect. Most trammels swing on one anchor point, allowing you to rout a circle. But to rout an oval, you need a trammel that swings on two anchor points.

This Oval Cutting Jig does just that. It consists of a trammel platform that supports a large trammel arm. At the end of the arm is a frame that holds a router securely in place, see Exploded View.

As the arm rotates around the platform, the two anchor points are working together to control the orbit of the router. One anchor point controls the length of the oval (the longer distance across the oval), the other anchor point controls the width of the oval (the shorter distance across the oval).

HOW THE JIG WORKS. As the router orbits the platform, the two anchor points chase each other in a circular path. And while this is going on, they're also sliding back and forth in separate tracks that are perpendicular to each other, see photos above.

OVAL FRAMES. This jig allows you to do two things. You can rout the inside and outside edges of an oval frame with the width of the frame being equal all the way around. Also, the jig is good for routing a complex profile on the face of the frame (such as a roundover or groove as shown on page 20).

JIG FEATURES. If you've ever routed a molding that has an ornate profile, you know that you have to change bits frequently. To make that easy with this jig, the router is mounted on a base plate that swings up and down to allow easier access to the router's collet. It also lets you gradually lower the bit into the workpiece at the start of each pass.

MATERIALS. Because many of the pieces on the jig either rotate or slide, I used hard maple for most of the parts. The exceptions are the base and trammel platform (¾" plywood), and some ¼" Masonite for the tilting base plate and a pair of shims (for routing workpieces of different thickness). For sources of hardware, see page 31.

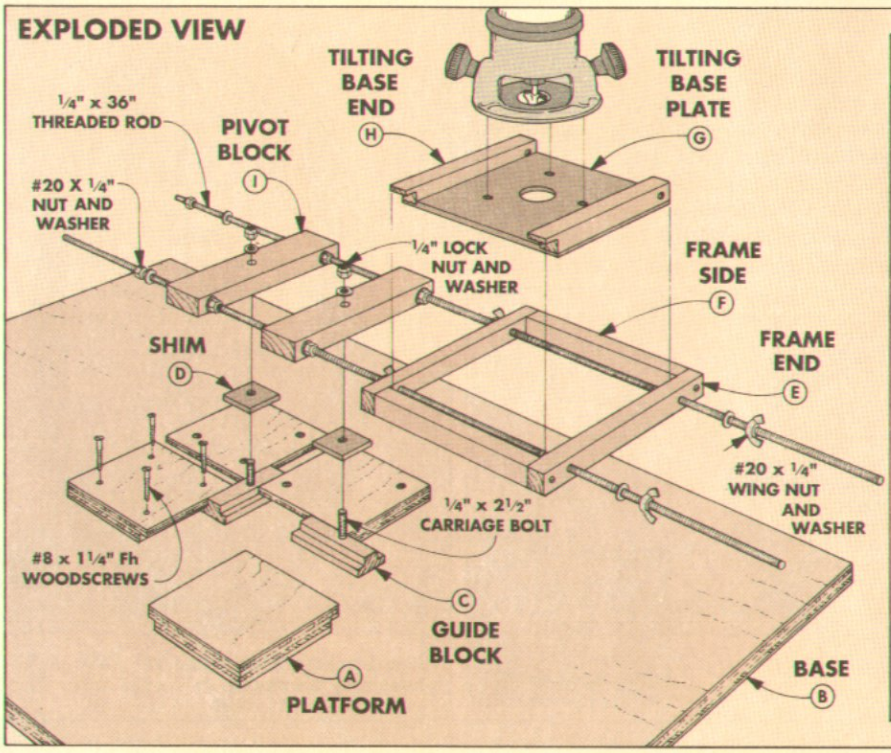

MATERIALS

PARTS LIST

TRAMMEL

A	Platform (1)	¾ ply - 11⅜ x 11⅜
B	Base (1)	¾ ply - 36 x 48
C	Guide Blocks (2)	¾ x 1½ x 4
D	Shims (2)*	¼ x 2 x 2

TRAMMEL ARM

E	Frame Ends (2)	¾ x ¾ x 10½
F	Frame Sides (2)	¾ x ¾ x 8¾
G	Tilting Base Plate (1)*	¼ x 8¾ x 8½
H	Tilting Base Ends (2)	⅝ x ¾ x 8½
I	Pivot Blocks (2)	¾ x 2 x 8½

* Use ¼"-thick Masonite

REQUIRED SUPPLIES

- (2) ¼" x 36" Threaded Rods
- (4) #20 x ¼" Wing Nuts
- (8) #20 x ¼" Nuts
- (14) ¼" Washers
- (2) ¼" x 2½" Carriage Bolts
- (2) ¼" Lock Nuts
- (20) #8 x 1¼" Fh Woodscrews

TRAMMEL PLATFORM

When designing this jig, a major consideration was the size of the frame to be routed.

The trammel platform has to be small enough to fit inside a glued-up blank, see photos on opposite page. But it also has to be large enough so there will be plenty of track for the guide blocks (C) to travel in, refer to Exploded View. (The following measurements are for the Oval Mirror on page 18. They will also work for similar sized frames.)

PLATFORM. The trammel **platform (A)** is cut from a piece of ¾"-thick plywood, see Fig. 1. After the blank is cut to size, the next step is to cut the track for the guide blocks.

Here, I took a slightly different approach. Instead of cutting the track in a "X" across the blank, I first cut a ⅜" rabbet on all four *edges* of the blank, see Fig. 1a. Then I cut the blank into four squares, see Fig. 2.

Now comes the difference. I turned the four squares so the rabbets faced *in*. The rabbeted edges then create the tracks.

ALIGNMENT BLOCKS. To help align the squares on a base (B), first cut a 12"-long rabbeted blank, see Fig. 3. (Later this blank will become the guide blocks.) Then cut the blank into two alignment blocks, see Fig. 3.

MOUNTING. To mount the platform, first cut a **base (B)** from ¾"-thick plywood, and draw alignment marks on the base, see Fig. 4. Now position a square on the alignment marks and screw it in place, see Fig. 5.

Next, butt the shorter alignment block up against the square and screw another square to the base with the block snug between the squares, see Fig. 5.

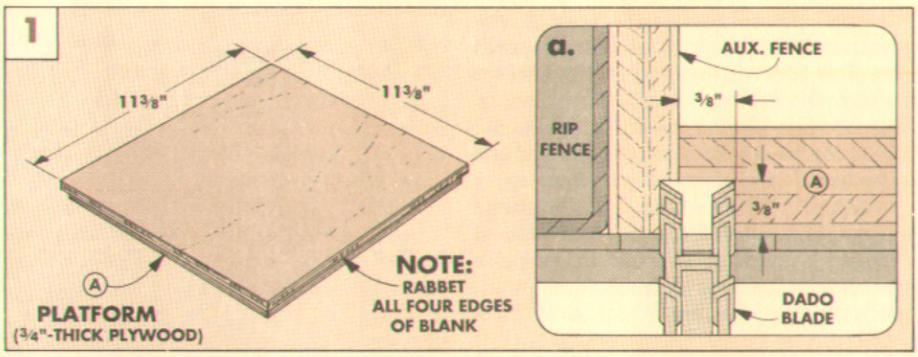

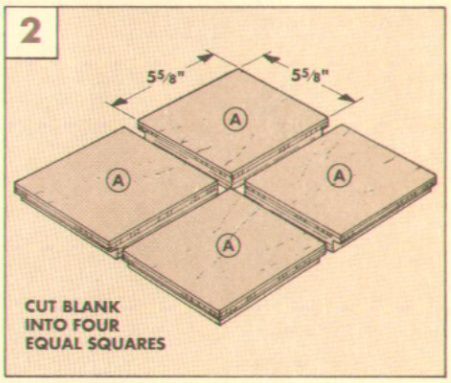

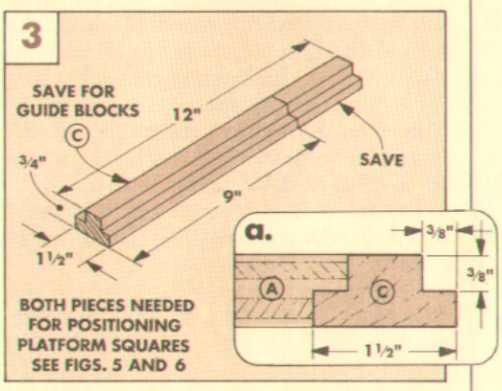

To complete the platform, screw down the last squares in the same manner, see Fig. 6.

GUIDE BLOCKS & SHIMS. To make the **guide blocks (C)**, cut the 9"-long alignment block into two 4"-long pieces, see Fig. 7. Note: If the guide blocks are too tight in the track, lightly sand them. Then drill a counterbored hole through each guide block for a carriage bolt, see Fig. 7a.

When routing a frame thicker than ¾", you'll need to shim up the trammel arm so it rides flat on the workpiece being routed. For the Oval Mirror I placed ¼"-thick **shims (D)** on the guide blocks, see Figs. 7 and 8.

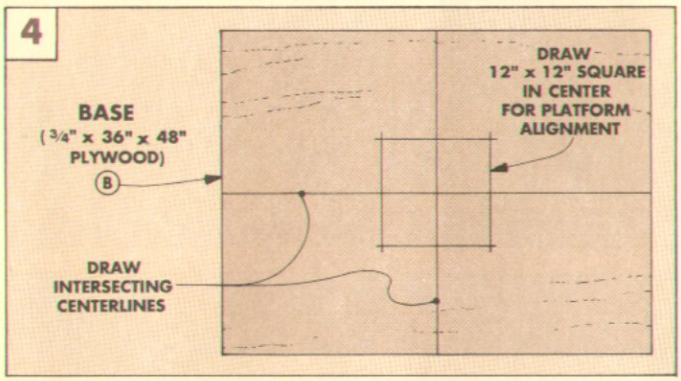

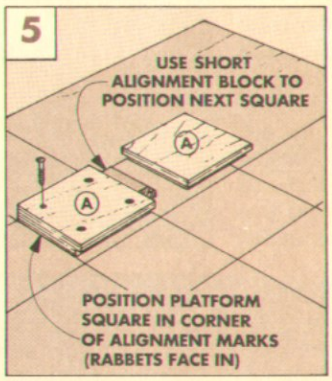

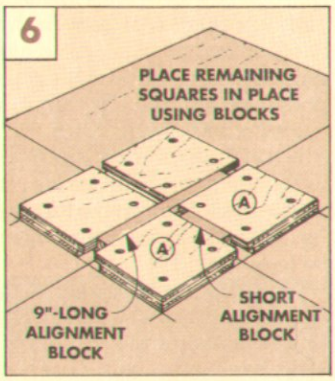

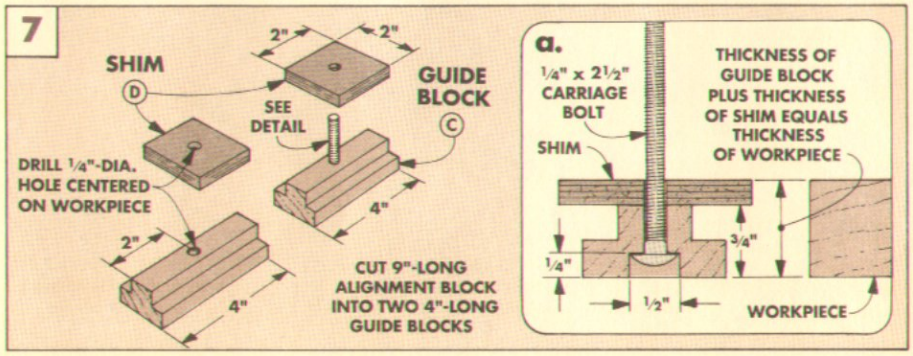

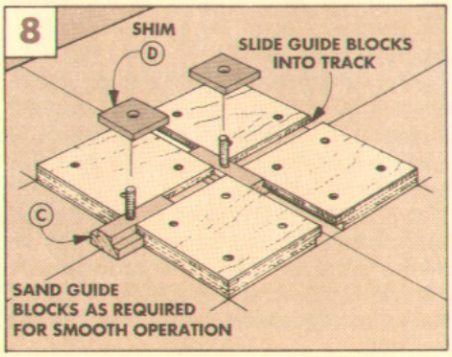

TRAMMEL ARM

After the trammel platform is complete, the next part to start working on is the trammel arm. This arm consists of a router carriage and two pivot blocks connected by threaded rods, see Fig. 13. The carriage supports the router, the pivot blocks determine the shape of the oval. I started on the carriage.

CARRIAGE. When routing an oval frame with a detailed profile, router bits need to be changed frequently. To make this a quick process, the carriage is designed so that it can be tilted up — making it a lot easier to get to the collet.

The carriage is actually a frame with a tilting base to hold the router. To build the frame, start by cutting two **ends (E)** and two **sides (F)** from ¾"-thick stock, see Fig. 9.

Next to accept the threaded rods, drill ¼" holes near the ends of each frame end (E). Also drill countersunk holes for the woodscrews that hold the frame together.

TILTING BASE. After the frame is screwed together, a **tilting base plate (G)** can be cut from ¼"-thick Masonite, see Fig. 10.

To support the base plate within the frame, cut two **tilting base ends (H)** to size, see Fig. 10. Then drill a ¼"-dia. hole for a threaded rod near one end of each piece. (Note: The hole is located ⅛" up from the bottom of the base end — it's not centered on the thickness.)

There's one more step before the base ends can be glued to the plate. To keep the bottom of the plate flush with the bottom of the carriage frame, rout a ⅛"-deep rabbet along two edges of the plate, see Fig. 10. Then glue the base ends to the plate.

BIT & MOUNTING HOLES. Now remove the plastic base from your router, and use it as a template to locate the bit and screw holes for mounting your router to the jig, see Fig. 11.

NOTCH THE BASE. After the holes are drilled in the base plate, there's one last step on the tilting base before it's complete. To allow it to sit down on the threaded rod (see Fig. 13), notches have to be cut at one end of the base ends (H).

To do this, I cut a rabbet on the edge opposite the ¼" holes, see Fig. 12. (Note: You'll remove some of the Masonite base plate when doing this. That's okay.)

PIVOT BLOCKS. The last parts to make for the trammel arm are the **pivot blocks (I)**, see Figs. 9 and 13.

After cutting the blocks to size, drill a ¼"-dia. hole in the center and two holes through the sides of both blocks, see Fig. 9. Note: The holes in the sides must align with the holes in the frame ends (E).

ASSEMBLY. Finally, assemble all the wood parts, hardware, and threaded rod for the trammel arm, see Fig. 13. Once the arm is completely assembled, attach the pivot blocks to the guide blocks with washers and lock nuts.

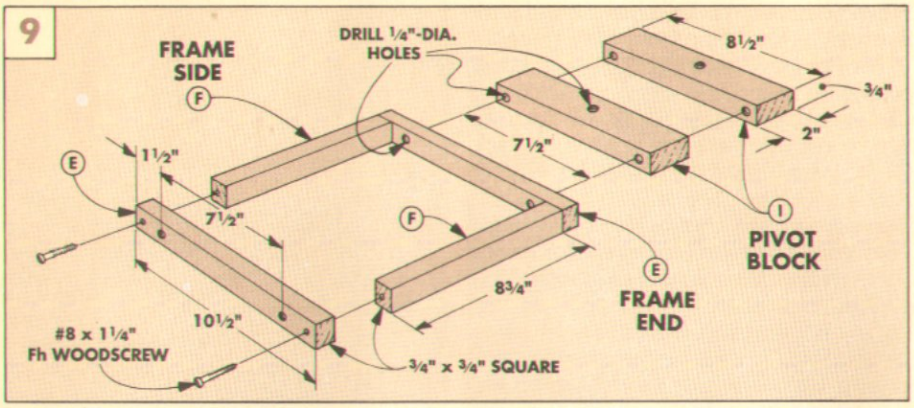

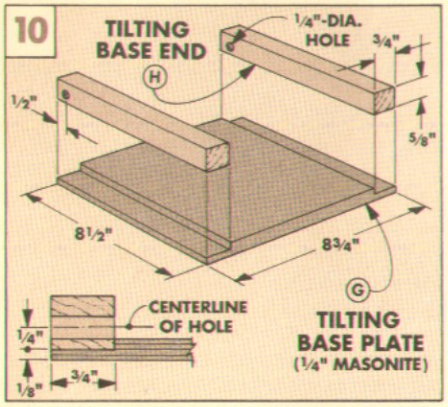

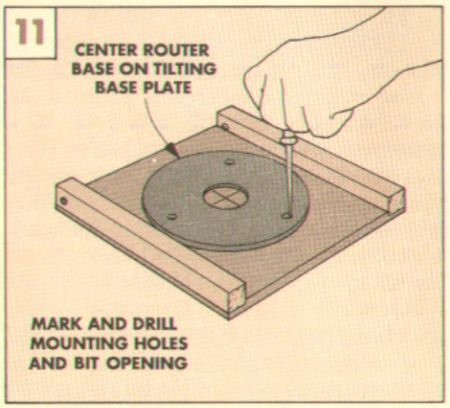

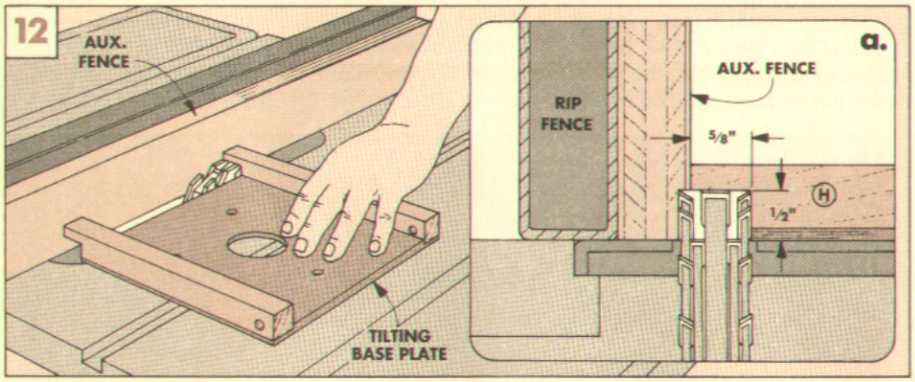

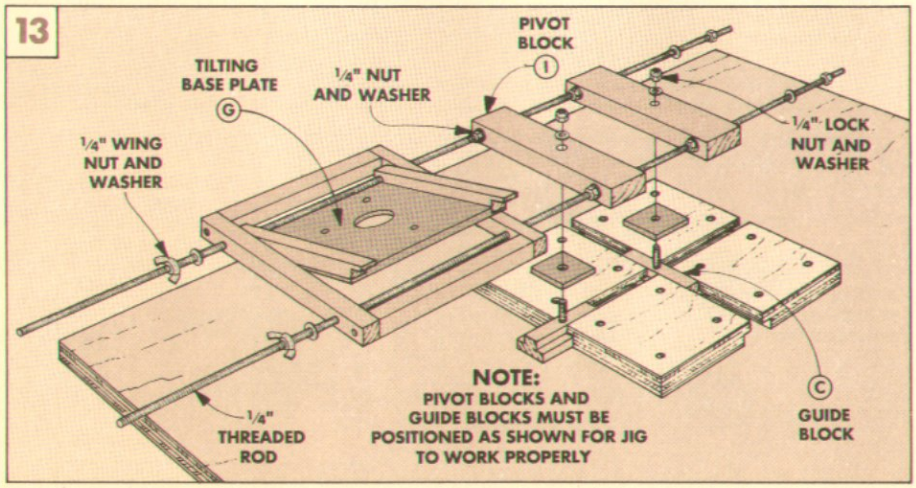

SETTING UP THE JIG

One thing I like about this Oval Cutting Jig is that it can be used to cut ovals of different shapes and sizes. The same jig can be used to cut several combinations of tall, short, wide, or narrow ovals. It all depends on how you set it up.

When setting up the jig for a particular shape, keep in mind that the distance between the front pivot block and the router bit (shown as 12½" in Fig. 14) determines the *width* across the oval. And the distance between the back pivot block and the bit (shown as 18½" in Fig. 14) determines the *length* across the oval.

AN EXAMPLE. The key set-up measurements for the jig are obtained from the dimensions of the oval frame you want to make. In the case of the Oval Mirror shown on page 18, the overall dimensions of the frame are 25" wide and 37" long.

The first step is to calculate the *shape* of the oval. To do this, first divide both the width and length by two. This gives you the minor and major radii of the oval. (For the Oval Mirror, the minor radius is 12½" and the major radius is 18½".) Then subtract the smaller number from the larger number to come up with the *radius differential*. (In this case it's 6".)

Now adjust the pivot blocks so they're the same distance apart as the radius differential (6"), see Fig. 14 and Adjusting The Trammel, below.

The last step is to adjust the jig for the *size* of the oval. To do this, move the router carriage so the distance between the inside edge of the router bit and the center of the front pivot block equals the radius of the width (12½"). (Measure from the center of the carriage bolt in the front pivot block.)

DIFFERENT FRAMES. If you're designing an oval frame that's significantly different from the Oval Mirror, keep in mind the limitations of a jig built with the dimensions shown here. It can only cut a certain shape and size frame.

The *shape* of the oval is limited to a radius differential of 4" to 6", see Fig. 15.

If the radius differential is less than 4" the guide blocks will run into each other. And if the radius differential is greater than 6" the guide blocks will run out of track.

The *size* of the oval is limited by the size of the base and the length of the threaded rods. Build a larger jig and it's possible to rout a 40-foot frame. But you'd also need 40-foot long threaded rods.

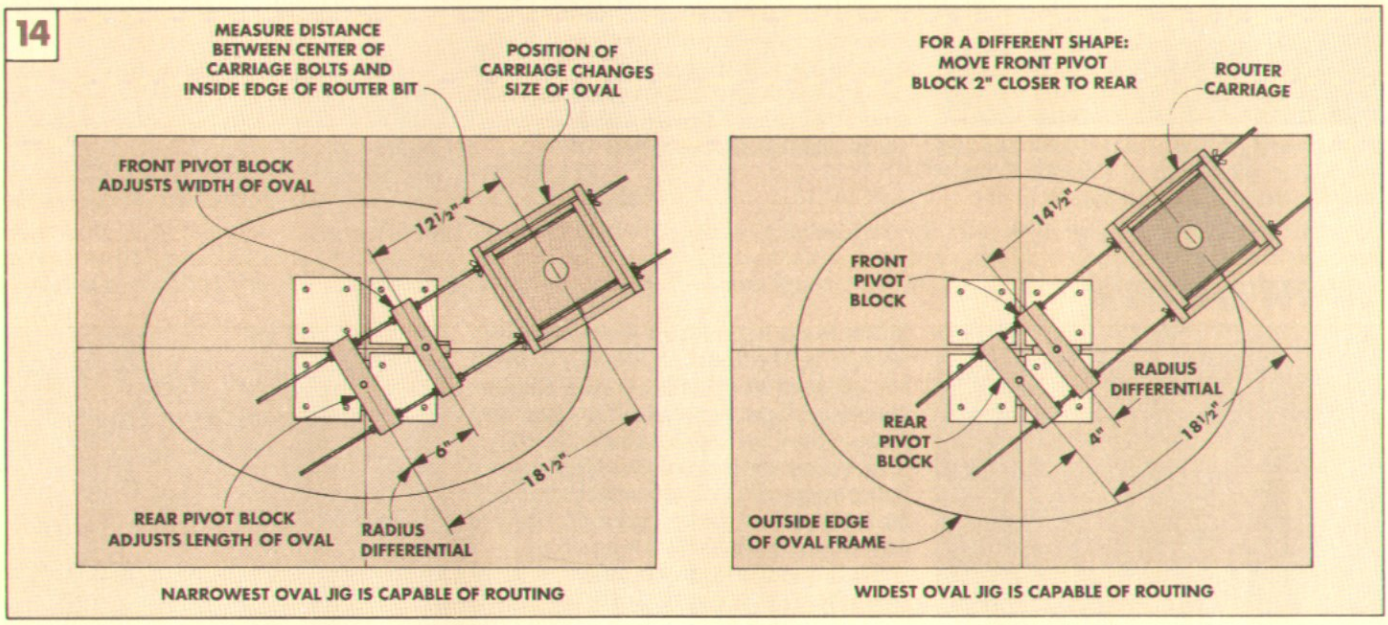

ADJUSTING THE TRAMMEL

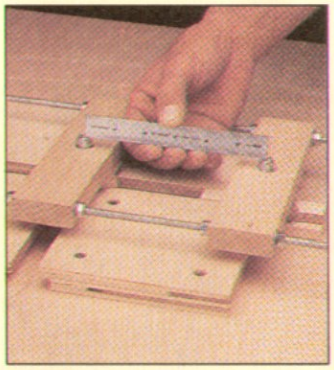

When setting the radius differential, make sure you're using the distance between the centers of the carriage bolts.

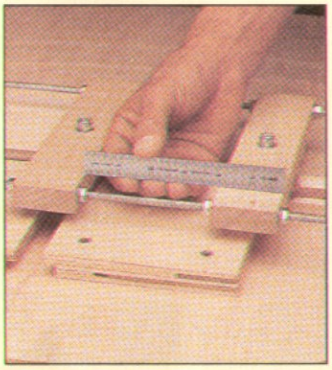

Once the radius differential is set, measure the distance between the pivot blocks to make sure they're parallel.

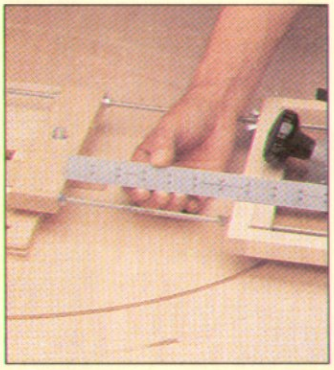

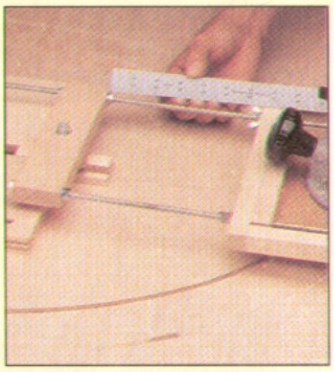

Routing an oval frame with a complex profile requires that the router carriage be moved back and forth along the threaded rods. After each adjustment, always check to make sure the carriage and front pivot block are parallel to each other.

Quick Fixes

Every woodworker will make mistakes from time to time, and the Woodsmith staff is no exception. The trick is coming up with solutions that work.

LOOSE TENONS

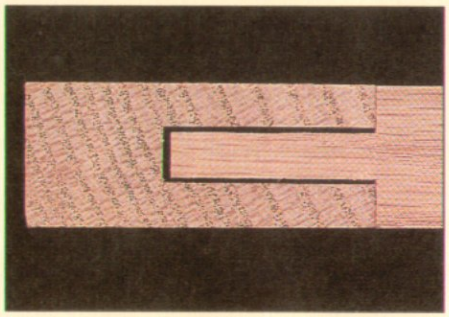

For the best joint, a tenon should fit a mortise like a hand in a glove. But what can you do if the tenon fits a little loose?

■ Here's a solution to the problem of loose tenons that works well for me. What I do is enlarge the tenon with thin pieces of veneer sliced from a piece of scrap. I glue the veneer onto the cheeks of the tenon and shave or sand the tenon to fit the mortise.

There's another way of doing the same thing. If the tenon will be *hidden* after assembly, I cut a piece of brown paper from a grocery bag to fit the tenon. Then I moisten the paper with glue and wrap it around the tenon. Sometimes I use multiple layers of paper on an extra-sloppy joint.

Ken Munkel
Design Director

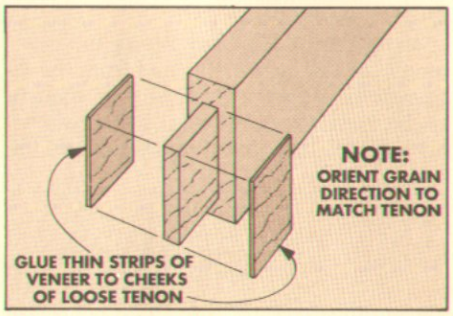

Tighten a loose-fitting mortise and tenon joint by enlarging the tenon. Glue scraps of wood to the cheeks, then trim for a good fit.

OPEN MITERS

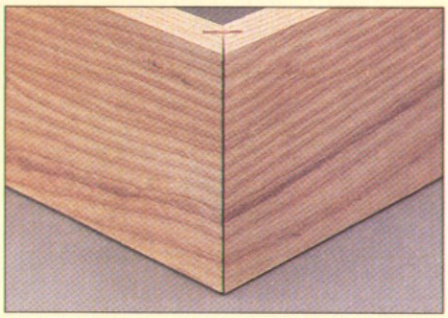

Sometimes a miter joint doesn't close completely, or it opens up after the project's been assembled. Is there any way to fix it?

■ Miters can be one of the trickiest joints to work with. The trouble is, it's easy to be off just a little bit when cutting a miter. Or if the miter *is* cut right, there can still be a gap at the corner if the frame isn't assembled square.

As long as the mitered pieces fit together well to begin with, I close the gap by burnishing (rolling over) the tips, see drawing. This way, the miters don't have to be re-cut.

But if the miters are *too* far out of alignment, there's not much choice but to "break" the joint and start over by re-cutting the pieces or assembling the frame square.

Ted Kralicek
Creative Director

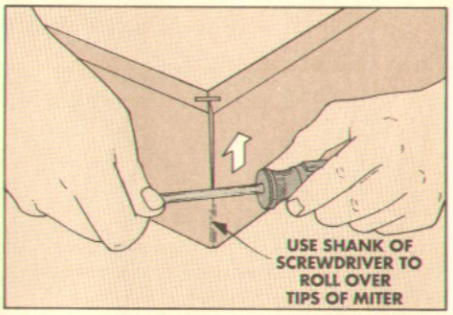

Open miters have many causes but one good solution. Use the shank of a screwdriver to "burnish" the miter tips closed.

LIFTED VENEER

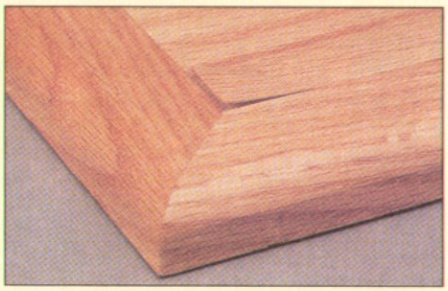

It doesn't take a big problem to make a project look bad. A piece of lifted veneer can make a project look like it's falling apart.

■ To repair lifted veneer or a cracked joint, I use a "pressure gluing" technique. First I place a dab of glue at the opening, then I shoot the glue under the veneer with an air compressor. This propels glue all the way under the veneer or into a deep crack.

In shallow cracks, I blow through a straw to force the glue under the veneer, see drawing. After the area under a piece of veneer (or the crack in an open joint) has been filled with glue, it can be clamped back in place while the glue dries.

Jan Svec
Designer

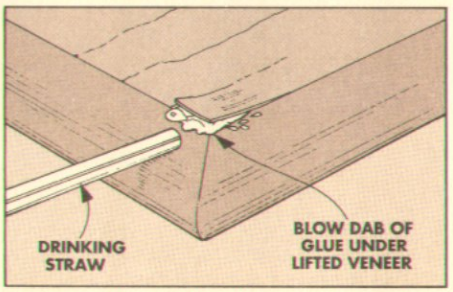

To get a piece of lifted veneer to lay down and stay down means re-gluing. Blow a shot of glue under the crack with a straw.

ROUTER CHIPOUT

Have you ever been routing the edge of a workpiece and heard an awful "crack?" That's the sound of chipout.

■ There's two things you can do when you get chipout. If you're lucky, you can find the broken-off chip and glue it back in place. But often the chip gets torn up too much or sucked up by the vacuum.

Then my solution is like the trick used by old greens' keepers on a nasty divot — first enlarge the bad spot until you're back to undamaged territory. Now patch the area with a new piece cut to fit the hole, see drawings.

I carefully select the filler piece for color and grain direction, so you can hardly tell that a piece chipped out.

Doug Hicks
Managing Editor

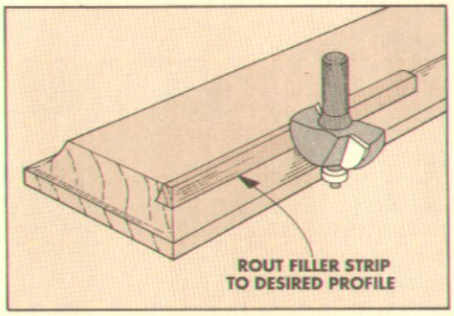

A chipped-out edge can be repaired by routing away the damage and replacing it with new wood. The key is a careful color match.

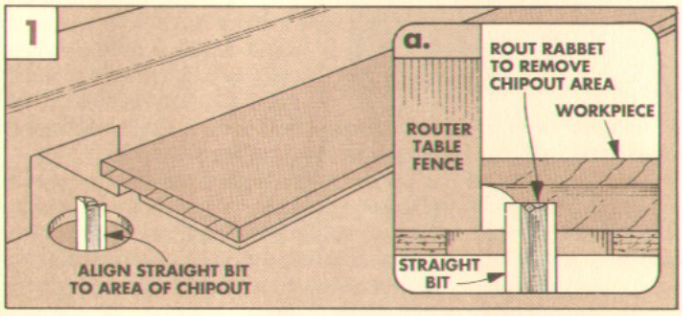

A straight bit in the router table can be used like a dentist's drill to repair a chipped piece of wood. Enlarge the "cavity" to remove damaged material and provide a straight edge to accept a "filling."

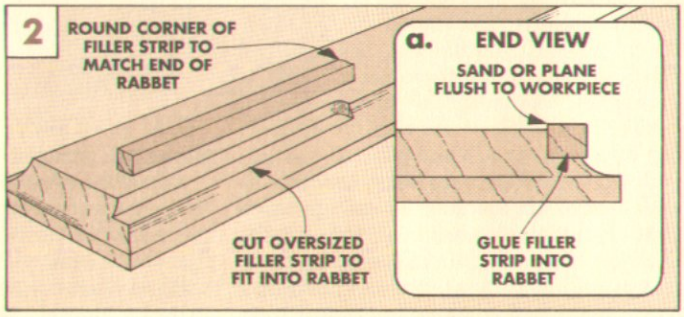

Now glue an oversize filler strip into the routed edge. Sand or plane the top surface flush, then come back with the router and repeat the original profile, see the drawing at the top of this page.

CRACKS & SPLITS

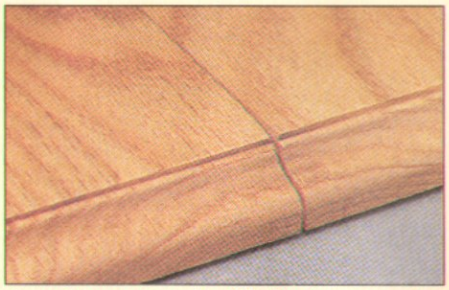

Sometimes a crack will develop on a glue joint after the project is complete. Wood filler isn't the answer — there's a better way.

■ It's not unusual to see an edge-glued table top — or any project — split apart because of wood movement caused by changes in humidity. Here's how I handle the problem.

First I cut the split panel apart right through the crack. This relieves any built-up stress on the crack line. Then I glue the pieces back together and clamp them tight.

I would *not* use wood putty in a situation like this — putty won't expand or contract like the wood. And if the wood *does* expand later, the putty can be forced out of the joint.

Steve Curtis
Shop Manager

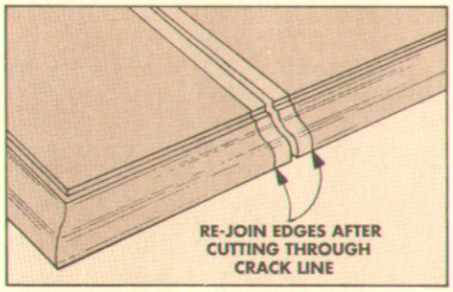

A crack or split shouldn't be patched with putty. Instead, continue the crack with a machine cut. Then re-glue the two edges.

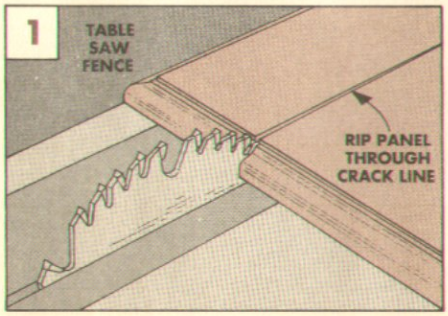

There are two ways to repair a crack. If the panel is a manageable size, Steve uses the table saw to rip through the split joint line.

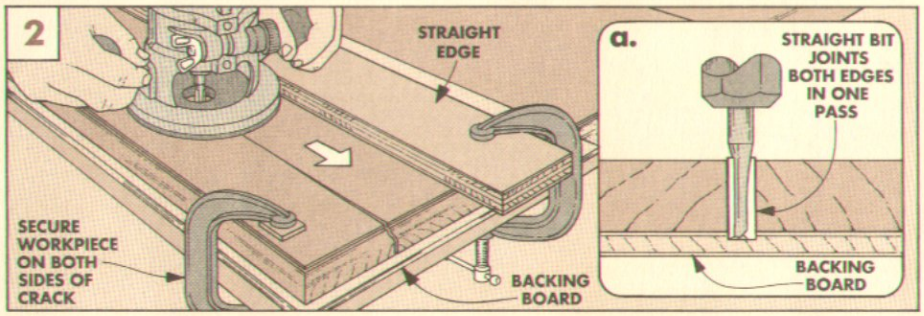

On a larger panel, a hand-held router with a straight bit works just as well. To minimize the loss of material, use the smallest router bit possible. Then re-glue and clamp the boards back together. If the panel has to be the same width, add a wood "filler" strip.

Router Table Tips

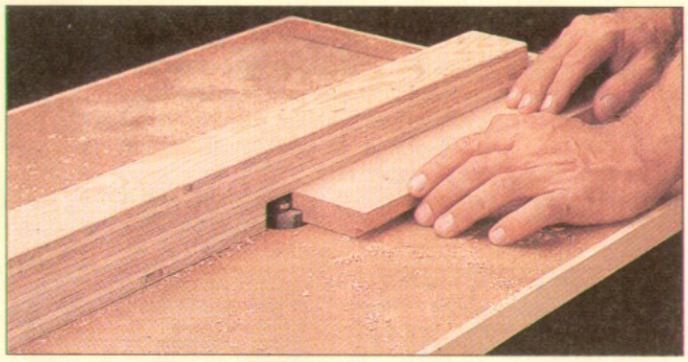

How many times have you started to work on a router table and wondered which way to feed the workpiece? Or how fast to feed it? When I'm about to use the router table, I stop and think about these two questions.

FEED DIRECTION. The most important thing in using a router table is to always have control of the workpiece. And the way to do this when routing an edge is to feed the workpiece *into* the rotation of the bit — *not* with the rotation, see Fig. 1.

Since the bit is spinning counterclockwise, feeding the workpiece from right to left (into the rotation) causes the bit to pull the workpiece *against* the fence, see Fig. 1a.

If you're not using a fence, and the bit has a bearing on it, feeding the workpiece from right to left has the same effect — the bit pulls the workpiece against the bearing.

BACKROUTING. Feeding the workpiece from left to right, called backrouting, can be disastrous, see Fig. 2. When backrouting the bit can grab the workpiece, push it away from the fence or bearing, and out of your hands. Or, if you're still hanging onto the workpiece, pull your fingers into the bit.

ANOTHER DANGER. Another technique that's just as dangerous is placing the workpiece *between* the bit and the fence, see Fig. 3. If you're routing from right to left, the bit will grab the workpiece and pull it (and your fingers if they're still holding on) right on through the bit and send it flying out the other side of the router table.

SLOTS & GROOVES. One thing I like about using a router table is it cuts a cleaner slot or groove than a table saw. But when routing a slot or a groove, there is one thing you must always keep in mind — if you widen the groove, always make sure the bit is cutting on the edge of the groove *closest* to you, see Fig. 4a. This way, the bit is safely pulling the workpiece into the fence.

If you rout the other edge, the same thing will occur as when placing the workpiece between the bit and the fence, the workpiece (or your hands) will get pulled through the bit.

FEED RATE. A normal tendency when using a router table is to be cautious and feed the workpiece slowly. But, if the workpiece is fed too slowly the wood can burn.

The best way to determine if the wood is going to burn is to rout a piece of the same type of wood before you rout your actual workpiece. (I use a piece of scrap from my project.) Then, once you've got an idea what feed rate it will take to get a clean cut, rout the workpiece at the same rate.

LIGHT PASSES. Another technique to reduce burning (and increase control) is to rout the profile in two or three passes, raising the bit or moving the fence slightly between passes. This technique helps reduce chipout as well.

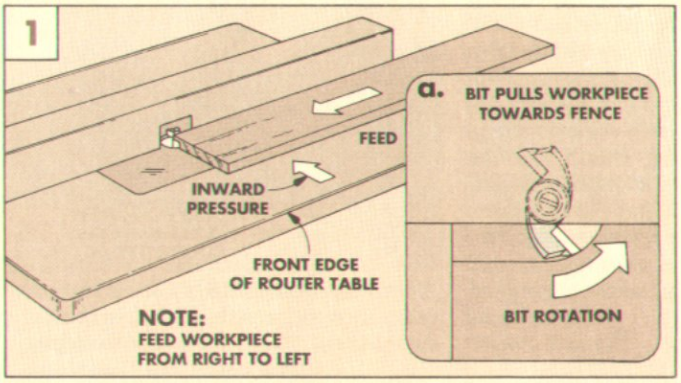

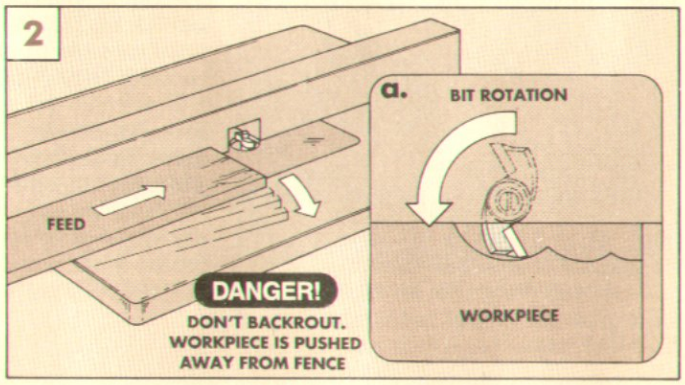

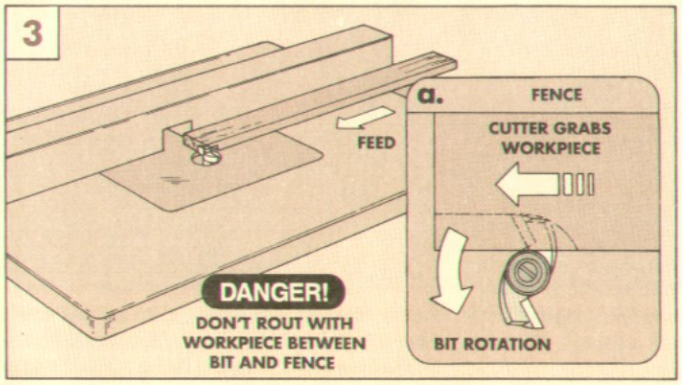

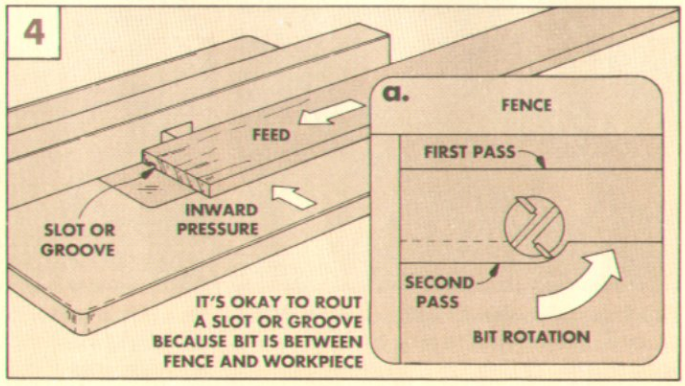

AUXILIARY FENCE

When using a router table, it can be difficult to predict just where and when chipout will occur. It's most likely to be a problem in wood having irregular grain, such as around a knot or where the grain makes a sharp turn towards the edge of a board. But I've seen a chip break off even when the grain seemed fairly straight.

If I'm faced with a chipout problem that can't be eliminated by adjusting the feed rate or routing in multiple passes, then I'll attach a zero-clearance auxiliary fence to my router table fence, see Fig. 5.

BACKING BOARD. The key to the zero-clearance fence is a disposable backing board that fits tight around the bit, see Figs. 5 and 6a. When the router bit cuts with the zero-clearance fence in place, the wood fibers along the routed edge are supported by the backing board. This way, the fibers shear off cleanly — they don't chip out.

MINI-JOINTER. To make the jig even more versatile, I added another feature that turns my router table into a "mini-jointer," see Fig. 7. By adding an adjustable outfeed side to the auxiliary fence, I can use a straight bit to joint (straighten and smooth) the edges of small boards. (When edge jointing, I'll leave off the backing board.)

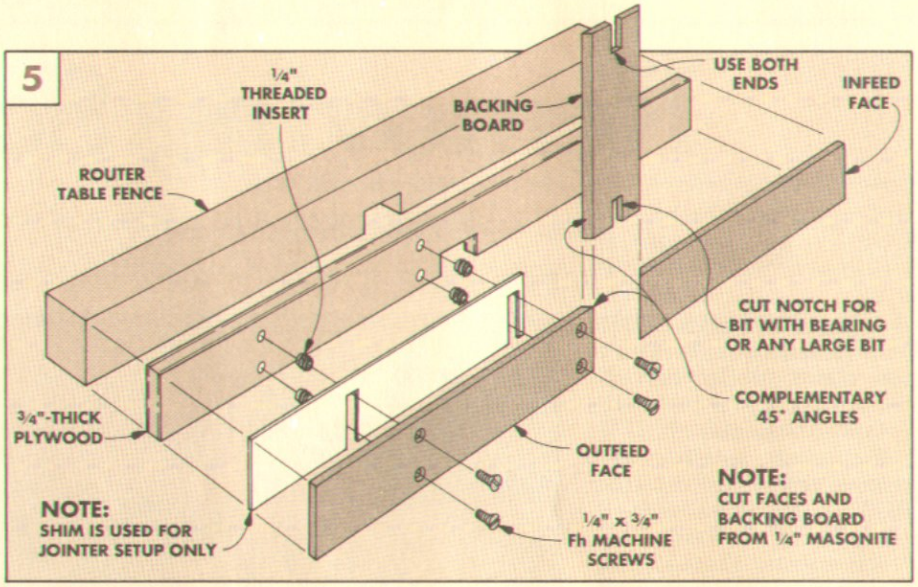

BUILDING THE FENCE

The **auxiliary fence** is made from 3/4"-thick plywood and 1/4"-thick Masonite, see Fig. 5.

The removable **backing board** and the inside edges of the Masonite **faces** are cut at complementary 45° angles, see Fig. 5. This allows the backing board to slide in place and "lock" behind the faces. (Because each backing board is used only once, I make extras as I'm making the first one.)

The infeed (right-hand) half of the Masonite face is glued onto the plywood, see Fig. 5. But the adjustable outfeed face for the edge jointer is held in place by four machine screws in threaded inserts. When the jig is used as a zero-clearance fence, the screws are tightened all the way down.

SETUP

To set up the zero-clearance fence, first clamp it to your router table fence (without the backing board), see Fig. 6. Then adjust the fence and bit to cut the height and width you want.

Once the profile is set, the next step is to install the backing board.

ZERO-CLEARANCE OPENING. The disposable backing boards are customized for each router bit. To do this, turn on the router and plunge the backing board down on the spinning bit, see Fig. 6a. (To make the plunge possible, it may be necessary for you to notch out the center of the backing board for any bit with a bearing or a large bit.) As the backing board is plunged down, the router bit will automatically cut the zero-clearance opening.

If you readjust the router table fence (or the router bit), the clearance between the bit and the backing board may change. If this occurs, just insert a new board.

Safety Note: Before turning on the router, always slide the backing board up and out of the way of the bit. Because of the zero clearance, the cutter on the bit may jam against the edge of the backing board.

Once the backing board is in place, rout the workpiece from right to left, across the bit in the usual manner.

JOINTER SHIM. To convert the zero-clearance fence into an edge jointer, first loosen the screws and insert a thin shim behind the outfeed side of the 1/4" Masonite face, see Fig. 7. (I use poster board for a shim.) Once the shim is in position, tighten down the screws to keep it in place.

Now adjust the router table fence so the outside edge of the straight bit is flush with the outfeed face of the auxiliary fence, see Fig. 7a.

If you want to make a deeper cut with each pass, insert additional shims. But remember, readjust the router table fence.

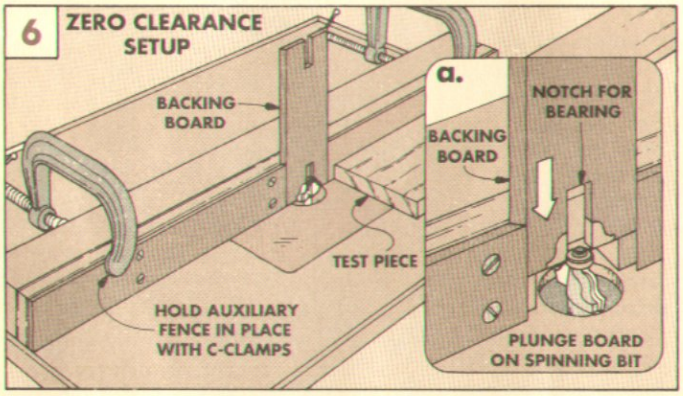

The key to the zero-clearance fence is a disposable backing board. The backing board is plunged on the bit to create a perfect fit around the cutters. As the workpiece is routed, the wood fibers are sheared off cleanly against the backing board — without chipout.

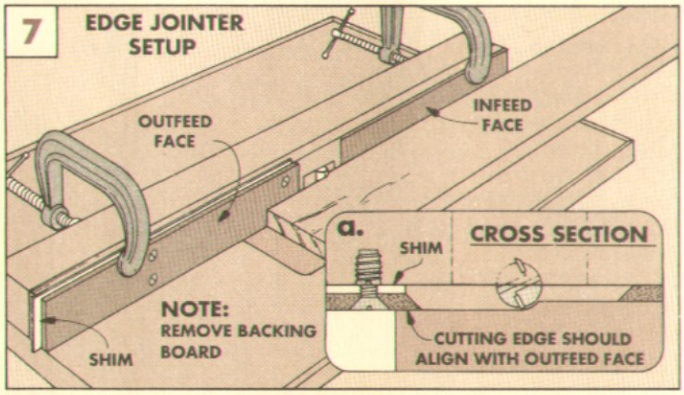

To convert a router table into a "mini" edge jointer, first insert a shim behind the outfeed face of the auxiliary fence. Then adjust the fence so the face is flush with the outside edge of the straight bit. To make a deeper cut, add another shim and readjust the fence.

Removing Screws

The easiest way to remove a broken or damaged screw is to use a screw extractor.

One of the most frustrating problems you're likely to face as a woodworker isn't really woodworking at all — it's removing broken screws.

Fortunately, there is a way to remove screws that can make the job a lot less frustrating — using a screw extractor.

There are two kinds of extractors: spiral flute extractors and hollow bit extractors. Each of these tools works differently.

SPIRAL FLUTE

Spiral flute extractors can be used to remove a screw with a damaged (stripped) slot, as well as a screw with a broken-off head. They get their name from the spiral flute on the tapered end, see photo.

These extractors work by driving the end into a hole drilled in the damaged screw. Then the extractor is backed out — taking the screw with it, see drawings below.

UNDAMAGED SCREW HOLE. The advantage to using a spiral flute extractor is that you can get the screw out without damaging the screw hole. So you can immediately replace the screw with a new one.

DRAWBACKS. Unfortunately, these extractors can only be used on No. 8 and larger screws. This limits their usefulness in woodworking where smaller screws are commonly used. (Each extractor removes just one size screw. They're usually sold as a set of different sizes, see Sources, page 31.)

Another possible drawback is the need to drill a pilot hole. If the head of a screw is broken off, it can be hard to start a pilot hole.

Also, many screws on the market today are made of hardened steel. It's nearly impossible to drill a hole in a hardened steel screw, such as a drywall screw. So, in this case, there's another system you can use.

HOLLOW BIT

This other system doesn't require a pilot hole. The extractor is a hollow drill bit that works almost like an apple corer. It looks like a short steel tube with teeth at both ends, see photo. (When the teeth on one end wear out, you can use the other end.)

WORKS "IN REVERSE." The hollow bit extractor is used in a portable drill that can be reversed; it can't be used in a drill press. It's driven in reverse down over the end of a broken screw, see drawings below.

The hollow bit removes screws in one of two ways depending on the diameter of the broken screw. If the shank is small enough to fit inside the hollow bit, then the extractor drills out a core with the broken screw inside. (The hole is filled with a dowel.)

But if the broken screw is too large to fit inside the hollow bit, then the teeth of the bit engage the screw. Since the bit is driven in reverse, the headless screw is backed out of the wood as the bit grabs it and turns.

REMOVES SMALL & LARGE SCREWS. These hollow bit extractors are available in three (outside) diameters, 1/4", 5/16", and 3/8", see page 31. So they can remove the sizes of screws most commonly used by woodworkers. The hole made by the bit needs to be plugged with a dowel.

SPIRAL FLUTE EXTRACTORS

Using a spiral flute extractor is a two-step process. First, drill a pilot hole into the damaged or broken screw.

Next, hammer the extractor into the pilot hole. Then grasp the extractor with a wrench and turn it counterclockwise. Since it's tapered, the spiral flutes quickly jam in the pilot hole. As you continue to turn the extractor, it backs out the screw.

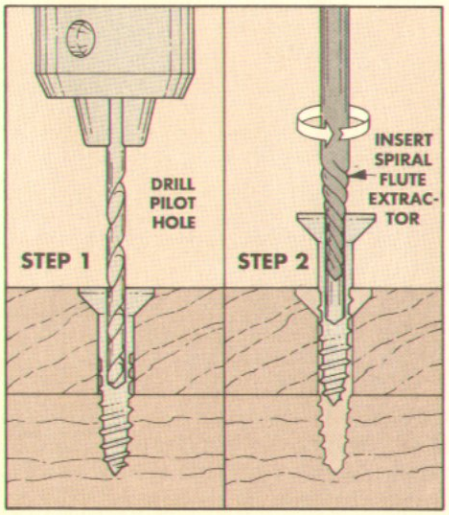

HOLLOW BIT EXTRACTORS

The hollow bit extractor removes screws in two ways. If the broken screw fits inside the bit, then the extractor drills a core with the screw inside.

But if the broken screw is too large to fit inside the hollow bit, then the teeth on the bit engage the screw. Since the bit is driven in reverse, the broken screw is backed out of the wood as the bit grabs it and turns.

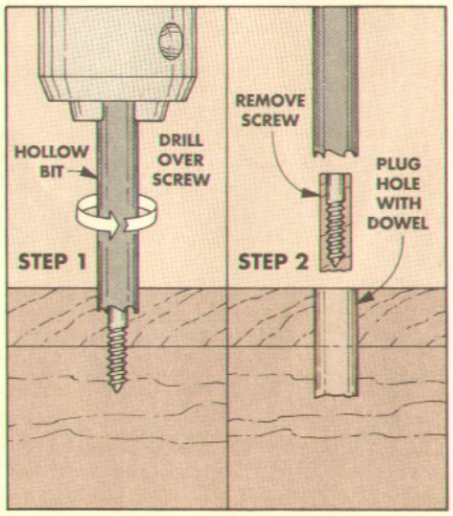

Sources

ROCKING CHAIR

Woodsmith Project Supplies is offering a set of full-size patterns for the Rocking Chair shown on page 6. Included are patterns for the back legs, back rails, rockers, angled side rails, arms, arm supports, and seat.

W8005-220 Rocking Chair Patterns $4.95

MORTISING BITS

To drill the mortises for the Rocking Chair, we used special mortising bits on the drill press. These bits are similar to Forstner bits, but they have a long flute to pull all the chips out of a mortise.

Woodsmith Project Supplies is offering three sizes of these bits. (You need a 1/4" and 1/2" bits for the Rocking Chair.) We're also offering a set of three.

W1505-647 1/4" Bit $8.95
W1505-650 3/8" Bit $9.95
W1505-653 1/2" Bit $10.95
W764-150 Set of 3 ..... $28.95

OVAL MIRROR

The Oval Mirror frame shown on page 18 doesn't require any special hardware to build. After building the frame, we had a local glass shop cut an 1/8"-thick oval-shaped mirror to fit the rabbet in the back side. (Note: Have the shop cut the mirror about 1/8" undersize all around to make sure it will fit and allow for any expansion and contraction in the wood.) We paid $42.00 for the oval mirror.

Woodsmith Project Supplies is offering a kit of hardware to mount and hang the mirror as shown on page 21.

W784-100 Oval Mirror Hanging Kit $8.95
- (16) No. 7 Push Points
- (4) Self Adhesive Bumpers, 1/2" Square
- (4) Brass Hinged Hangers, 1 1/8" long, with 1/2" Screws
- (2) Brass Wall Hooks w/Pins
- (10 feet) Heavy Braided Picture Frame Wire

OVAL CUTTING JIG

To make the Oval Cutting Jig shown on page 22, you'll need a variety of hardware that's commonly available at most home centers and hardware stores.

Woodsmith Project Supplies has also put together a kit of all the hardware needed to build the Oval Cutting Jig. (Note: The wood is not included.)

W784-200 Oval Cutting Jig Hardware Kit $5.95
- (2) 1/4"-20 x 36" Threaded Rods
- (2) 1/4" x 2 1/2" Carriage Bolts
- (14) 1/4" Washers
- (2) 1/4" Lock Nuts
- (8) 1/4" Nuts
- (4) 1/4" Wing Nuts
- (20) No. 8 x 1 1/4" Fh Woodscrews

ADJUSTABLE TRIANGLE

On page 17, we talked about using an adjustable triangle to accurately set up a miter gauge on a table saw. Adjustable triangles can be purchased at local art and drafting supply stores for about $15 to $20. Or from the sources below.

SCREW EXTRACTORS

On page 30 we talked about two different types of screw extractors. The spiral type is available from many hardware stores. Sears also has a five-piece set in a plastic case (No. 67322) available at their retail stores. The Sears Tool Catalog also offers a ten piece set (No. 20616) that includes both screw extractors and matching drills.

The hollow bit screw extractors are available in three sizes (1/4", 5/16", and 3/8") from Trend-Lines, see below. **Woodsmith Project Supplies** is offering these extractors in 1/4" and 3/8".

W1101-325 1/4" Hollow Bit Screw Extractor $12.95
W1101-327 3/8" Hollow Bit Screw Extractor $14.95

ROUTER BITS

Carbide-tipped router bits used to build the projects in this issue are available from **Woodsmith Project Supplies.** Order the shank size to fit your router.

W1514-603 1/8" Straight Bit (1/4" shank) $10.95
W1514-625 1/4" Straight Bit (1/4" shank) $10.95
W1512-665 1/4" Straight Bit (1/2" shank) $12.95
W1514-643 1/2" Straight Bit (1/4" shank) $13.95
W1512-676 1/2" Straight Bit (1/2" shank) $14.95
W1514-811 1/8" Round-Over Bit (1/4" shank) $23.95
W1512-821 1/8" Round-Over Bit (1/2" shank) $26.95
W1514-400 3/8" Rabbeting Bit (1/4" shank) $24.95
W1512-450 3/8" Rabbeting Bit (1/2" shank) $26.95
W1514-724 3/4" Core Box Bit (1/4" shank) $22.95
W1512-733 3/4" Core Box Bit (1/2" shank) $29.95

1/4" ROUND-OVER. To make the profile shown on page 24 for the Oval Mirror, you'll need a special router bit. It's a 1/4" round-over without a bearing.

On page 17, we've shown how to remove a bearing from a high speed steel Sears router bit (No. 26309), and reshape the bit so it can be lowered into the work.

Another option is to purchase a bit made for this purpose. Cascade Tools (see below) offers carbide-tipped 1/4" round-over bits without a bearing that can be lowered onto a workpiece. The order numbers are C1319 (1/4" shank) and C1323 (1/2" shank).

ORDER INFORMATION

BY MAIL

To order by mail, use the form enclosed with the current issue. The order form includes information on handling and shipping charges, and sales tax. Send your mail order to:

Woodsmith Project Supplies
P.O. Box 10350
Des Moines, IA 50306

BY PHONE

For fastest service use our Toll Free order line. Open Monday through Friday, 7:00 AM to 7:00 PM Central Time.

Before calling, have your VISA, MasterCard, or Discover Card ready.

1-800-444-7527

Note: Prices subject to change after February, 1993.

MAIL ORDER SOURCES

Similar hardware and supplies may be found in the following catalogs. Please call each company for a catalog or information.

Cascade Tools, Inc.
800-235-0272
1/4" Plunging Round-over Bit, Router Bits

Craftsman Wood Service
800-543-9367
Minwax Special Walnut Stain

Dick Blick
800-447-8192
Adjustable Triangle

Meisel Hardware
800-441-9870
Picture Frame Hangers

The Woodworkers' Store
612-428-3200
Picture Frame Hangers, Wing Nuts, Washers, Hex Nuts, Minwax Special Walnut Stain, Router Bits

Trend-Lines
800-767-9999
Hollow Bit Screw Extractors, Router Bits

Woodcraft
800-225-1153
Mortising Bits, Router Bits

Garrett Wade
800-221-2942
Adjustable Triangle, Router Bits

Woodworking Unlimited/Shopsmith
800-543-7586
Router Bits

MLCS Ltd.
800-533-9298
Router Bits

Leichtung Workshops
800-321-6840
Router Bits

Final Details

Rocking Chair

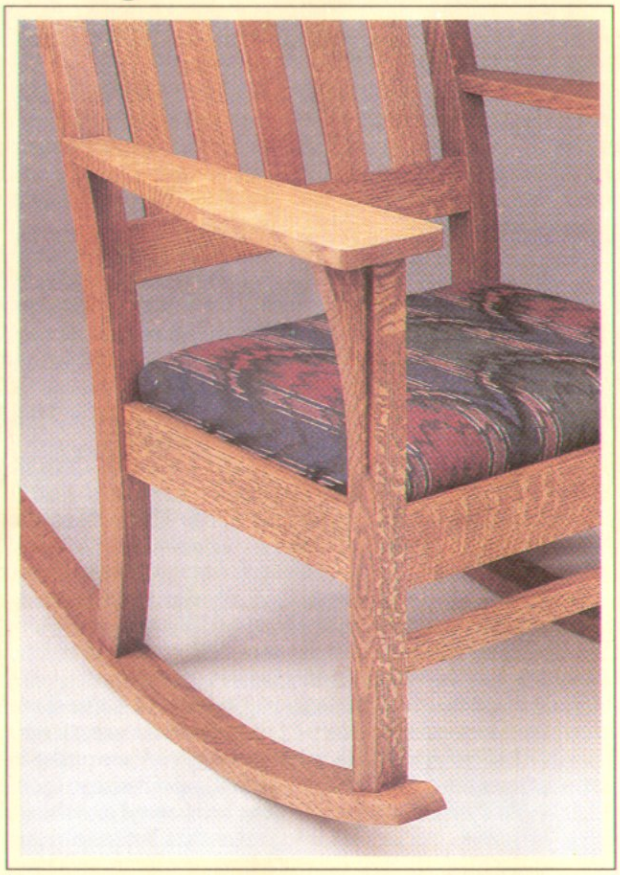

▲ *Quartersawn white oak gives this Rocking Chair the look of an antique. The arm rests are strengthened by a bracket that's tenoned into both the front leg and the arm rest itself.*

Oval Mirror

▲ *The oval frame around this mirror starts out as eight short pieces of walnut joined with splined miters. The oval shape, and also the decorative profile, are cut with a router.*

Oval Cutting Jig

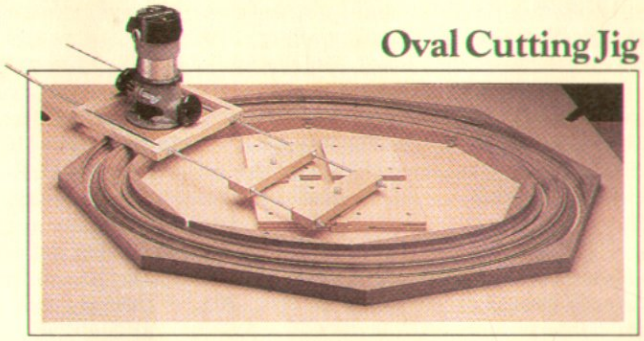

▲ *The size of the oval is controlled by adjusting the position of the router base along a pair of threaded rods. The shape of the oval is determined by the sliding runners in the center.*

Zero-Clearance Insert

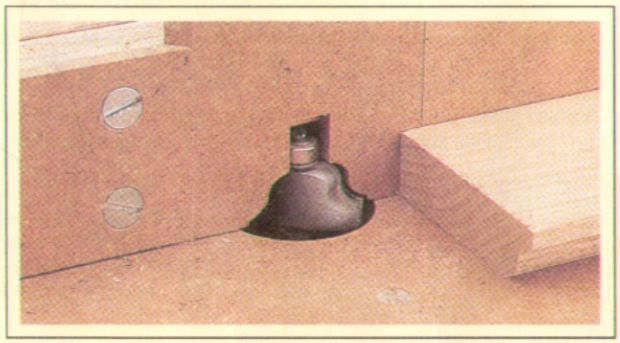

▲ *A router bit is less likely to cause chipout if it has a custom-shaped throat opening. Here, a piece of Masonite with beveled edges slides tightly into an auxiliary fence.*

Router Table Jointing

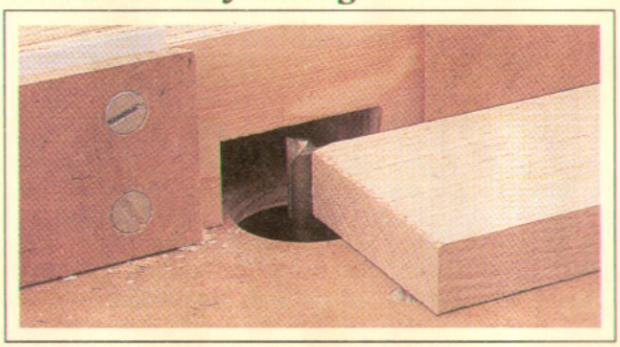

▲ *By mounting a split fence to the router table, it can be used with a straight bit as an edge jointer. The outfeed side of the fence is shimmed so it's flush with the edge of the bit.*